Sonair

ADAR One user manual

SDN108
Version 2.2

Sonair

Table of Contents

1. Introduction 6
1.1. Purpose of the document 6
1.2. User manual version and validity 6
1.3. Terms and definitions 7
1.4. Symbols and document conventions 9
1.5. General safety precautions 9
1.6. Intended use 10
1.7. Improper use 10
1.8. Ultrasound safety notes 10
1.9. Compliance and regulatory standards 11
1.10. Target groups and safety responsibility 11
2. Product description, Operation 13
2.1. Operating principle 13
2.2. Safety function 15
2.3. Safe state, safe output and fault reaction 15
2.4. Disabled state 16
2.5. Basics of detection capability 16
2.6. Device overview 17
2.7. Device coordinate system 18
2.8. Status indicators and their meaning 19
2.9. Types of sensing zones 19
3. Technical specifications 20
3.1. Features 20
3.2. Safety properties 21
3.3. Detection capability 23
3.4. Response time 25
3.5. Interfaces 26

3.6. Environmental conditions ... 27
3.7. Electrical data ... 27
3.8. Mechanical design and dimensions ... 29
4. System design ... 31
4.1. Minimum zone thickness due to sampled detection ... 32
4.2. Polygon design rules ... 33
4.3. Protection zone dimensioning for horizontal sensor view ... 34
4.4. Protective zone design for detection of persons in stationary applications ... 44
4.5. Detection zone design for detection of persons in the path of a mobile robot ... 47
4.6. Managing environmental conditions ... 50
4.7. Sensor-to-sensor interference ... 53
4.8. Mechanical integration ... 54
4.9. Integration in the control system ... 55
4.10. Cybersecurity ... 60
5. Mechanical and electrical installation ... 61
5.1. Mechanical installation ... 61
5.2. Electrical installation ... 62
6. Configuration and commissioning ... 66
6.1. Factory reset procedure ... 66
6.2. ADAR Designer ... 67
6.3. Connect to device ... 68
6.4. Configuration ... 69
6.5. Commissioning ... 77
7. Verification and validation ... 78
7.1. Verification of configuration ... 78
7.2. Validation of the safety function ... 79
8. Maintenance and troubleshooting ... 82
8.1. Regular maintenance ... 82

8.2. Cleaning instructions 83
8.3. Firmware update procedure 83
8.4. Replacing ADAR 84
8.5. Common issues and their solutions 84
8.6. Return to the supplier 89
8.7. Contact details and return 89
9. Disposal 90
9.1. Data security and configuration hygiene 90
Appendix A Device communication protocols 91
A.A. Protocol overview 91
A.B. CoAP message structure 91
A.C. User requests 91
A.D. Observable resources 91
A.E. Public API resources 92
Appendix B Device communication I/O 94
Appendix C Minimum zone length 101

DISCLAIMER:
Details in this document are subject to change without notice

Version history

Version	Released date	Comment
1.0	04 Jul 2025	First version
1.1	23 Sep 2025	Describes new features in FW - mainly Ch 10. Clarifications and improvements throughout document. Added error codes to Ch 8.
1.2	03 Dec 2025	Changes in intended use. Removed SELV from supply voltage info Ch 5.
2.0	12 Jun 2026	ADAR One with SIL2, PL d, EC type examination
2.2	26 Oct 2026	Transmission code can be locked to protect demand response time. Test object for validation update.

1. Introduction

1.1. Purpose of the document

This manual serves as a comprehensive reference for the correct and safe handling of ADAR over the entire lifecycle. Its core objective is to ensure that target groups understand and apply all necessary procedures from unboxing to disposal.

By following this manual, users can ensure that

- ADAR is used within its intended scope.
- Operational downtime caused by improper use or misconfiguration is minimized.
- Compliance with directives is preserved.

This manual is considered an integral part of the safety system itself and must be kept available for the entire lifetime of the device.

This user manual is written in the original language.

1.2. User manual version and validity

Contact technical support for access to newly released versions. Ask to join the mailing list if you want to be notified of updates.

User Manual	HW Version	FW Version	Updates Summary
v1.0	SPN1025A v1.2	v1.0	First version
v1.1	SPN1025A v1.2 SPN1025A v1.3	v1.1 v1.8	Describes new features in FW. Clarifications and improvements throughout document. Added error codes.
v2.0	SPN1025A v1.3	v2.0	ADAR One with SIL2, PL d, EC type examination
v2.2	SPN1025A v1.3	v2.1	User can lock transmission code. Test object for validation update.

Table 1: User manual, hardware, software versions compatibility

1.3. Terms and definitions

Term	Definition
ADAR	The protective device described in this manual. Throughout this document, "ADAR" refers to the product variant — hardware, firmware, and software versions — defined in section 1.2.
AGV (automated guided vehicle)	Mobile platform that navigates by guidance
AMR (autonomous moving robot)	Mobile platform that navigates autonomously
Coexistence	The ability of several ADARs to operate in the same area
Configuration report	Digital file containing all field layouts, input/output settings, and operational parameters for a safety device.
Detection capability	Minimum object size and characteristics for which the device detects an object within the protective zone under the specified conditions.
Detection volume	Zone (volume) in which a specified test piece will be detected.
EMC (electromagnetic compatibility)	The ability of a device to operate correctly in an environment with electromagnetic noise, without causing interference.
ESPE	Electro-sensitive protective equipment for protection or presence sensing
Ethernet (Non-safe communication)	Standard communication protocol used for diagnostics and configuration, not for safety-critical functions unless certified.
Exclusion zone	A user-defined zone where detected objects do not trigger the safety function. Also commonly known as blanking zones or ignore zones.
False negative detection	An object that should have been detected is missed. This is dangerous.
Field of view (FoV)	The geometric volume monitored by the device.
FIT (failures in time)	Unit of failure rate equal to one failure per 10^9 operating hours. Used to express the rate of dangerous undetected failures (λ_{DU}) and other failure modes in safety integrity calculations.
Grounding (shield ground)	Practice of connecting the shield of cables to ground to reduce electromagnetic interference.

Term	Definition
Hysteresis	Controls the number of consecutive frames an object needs to be detected inside the protective zone before the OSSD signal is set to OFF. Also called “multiple samplings”.
IP rating (ingress protection)	Classification defining the level of protection against dust and water.
Nuisance trip (false positive detection)	An unintended transition to safe state caused by a false detection, where no person or hazardous object is actually present. Also referred to as a false positive detection or spurious trip.
OSSD (output signal switching device)	Safety-rated output of the ESPE. Changes state to OFF when ESPE function is actuated.
PELV (protective extra low voltage)	Voltage level classification used in industrial systems to ensure safe operation under fault conditions.
Performance level (PL)	Safety rating from ISO 13849-1 indicating the reliability of a safety function.
Protective zone	Volume monitored by the safety device that triggers the safety output when entered.
Response time	Maximum time between the occurrence of the event leading to the actuation of the ESPE and the OSSD achieving the OFF state.
Safety controller	Central processing device that manages devices, field logic, and safety output behavior.
SELV (safety extra low voltage)	Power supply classification that limits voltage and current to safe levels.
SIL (safety integrity level)	Safety rating from IEC 61508. Quantitative measure of safety function reliability.
ToF (time of flight)	The time taken for a sound wave to reflect off an object, used to calculate distance.
Test piece	A standardized object used to simulate human intrusion during verification testing.
Warning zone	Non-safety related volume that provides early alerts before entry into a protective zone.
Zone preset	A combination of protective zone, warning zones and configuration parameters. The device can contain many zone presets.
Zone select	The action of activating one of the zone presets (by safe input). The select and activation is done by a controller (a PLC).

Table 2: Terms and definitions

1.4. Symbols and document conventions

1.4.1. Safety messages

Danger

Indicates a hazardous situation which, if not avoided, may result in death or serious injury.

Notice

Indicates an obligation which, if not observed, may cause damage to the equipment or reduce the effectiveness of the safety function. No direct risk of personal injury is implied.

1.4.2. Sample calculations

In the sample calculations further down this document, certain values are marked as "normative." This means that these values are defined in an international C standard within a specific context. It is the responsibility of the system designer to use the correct values in accordance with the standards applicable to the specific application context.

1.5. General safety precautions

The following document contains various safety instructions directly related to specific phases of the product lifecycle. In addition, the following general instructions must be taken into account.

Danger

The safety function is valid only if the protective device is applied and operated in accordance with the assumptions, constraints, and responsibilities specified in this user manual. In particular, the safety function is effective only when:

- used as part of a complete safety strategy including risk assessment, mechanical guards, and safe control architecture
- configured and installed in accordance with the manufacturer's instructions
- not bypassed
- maintained if performance degrades or installation conditions change

Danger

Hazard due to manipulated or damaged device.

- Do not modify or disassemble the device. Alterations compromise safety certification.
- Do not operate the device if it is visibly damaged or if performance has degraded (e.g., unexplained triggering, error codes, physical misalignment).

1.6. Intended use

The ADAR 3D ranging sensor is an ultrasonic sensor system designed for object and human detection within a defined monitoring zone. It uses phased-array ultrasound beamforming technology to identify intrusions and is optimized for indoor use in industrial environments, such as warehouses, manufacturing facilities and similar.

Typical applications include:

- Mobile hazardous area protection, such as collision prevention for AMRs, AGVs or automated forklifts.
- Hazardous area protection for stationary machinery.
- Access protection at points of entry.

The primary function of ADAR is to detect intrusions into the monitoring zone and trigger a reaction e.g. a machine stop. To do this, the OSSD outputs must be connected to a control device such as a PLC, S-PLC or a safety relay. The OSSD outputs are not intended to switch loads or directly enable actuators.

1.7. Improper use

ADAR must be used strictly within the parameters outlined in this manual and its accompanying documentation. Any use outside the defined operational conditions, configuration guidelines, or safety scope constitutes improper use and may compromise the function of the device.

Improper use includes, but is not limited to:

- Installation in explosive environments.
- Operation in out-of-spec environments (e.g., extreme temperatures).
- Rough mechanical handling during transport or setup.
- Reliance on the device to detect small, sharp or absorbing objects, outside defined specification, without proper validation.
- Use on equipment with too high velocity.
- Supplying incorrect power supply.
- Devices must be mounted securely and not prone to misalignment due to mechanical stress.
- Pollution exceeding the specified limits: dust, oil mist, or smoke can impair device.
- Operation in applications requiring higher safety ratings than specified.

1.8. Ultrasound safety notes

ADAR is equipment intended to emit ultrasound. The ultrasonic sound pressure produced by ADAR complies with the limits specified in EN IEC 61010-1 section 12.5.2 for frequencies between 20 kHz and 100 kHz.

The sound pressure level from ADAR is less than 110 dB at 15 cm from the front face during normal operation. The emitted sound is inaudible, so the emission (A-weighted) sound pressure level at any operator position does not exceed 70 dB(A). The ultrasonic frequencies emitted by ADAR are outside the operating range of hearing aids and cochlear implants; no interference with or harm to such devices is expected. No special precautions for ultrasound exposure are required at any stage of the product lifecycle.

1.9. Compliance and regulatory standards

Declaration of Conformity is available from the ADAR compliance page[1].

Sonair AS, Gullhaug Torg 2D, 0484 Oslo, Norway, is the manufacturer responsible for placing ADAR on the European market.

1.10. Target groups and safety responsibility

Each target group listed in the table below is responsible for ensuring that the performed activities preserve the safety function throughout the lifecycle of the protective device.

Target group	**Required knowledge (non-exhaustive list)**	**Sections to be studied at least**
	Responsibilities (non-exhaustive list)	
System designer (responsible safety engineer)	You need extensive expertise in functional safety, the design of safe machinery, and knowledge of the applicable standards.	All
	Responsible safety authority System-level risk assessment, selection of safety functions, and definition of the overall safety concept for the machine or system. Development of configuration.	
System integrator	You should be a certified industrial electronics technician or hold a similar qualification.	1, 2, 5, 8
	Mechanical installation, electrical integration, and correct connection of ADAR to the machine or system in accordance with the constraints and assumptions defined in this user manual.	
Validation and commissioning personnel	You need expertise in functional safety and a thorough understanding of the operation, functionality, and application of the machine into which ADAR is being integrated.	All
	Deployment of configuration. Verification and validation of the safety function, including confirmation of correct functional behavior.	

1. http://compliance.sonair.com

Operators / End users	You need to be familiar with the operation, functionality, and use of the machine into which ADAR is integrated.	2, 8
	Basic status monitoring, initiating safe resets, cleaning.	
Lifecycle management (maintenance technicians)	You need to be familiar with the operation, functionality, and use of the machine in which ADAR is integrated, as well as with machine maintenance in general.	2, 8, 9
	Cleaning, part replacement, diagnostics under safe conditions. Evaluation and implementation of safety- and security-related updates provided by the manufacturer, including firmware, software, documentation, and relevant notices. Decommissioning	
In this document, “user” denotes the responsible party for the activity described. The relevant target group is determined by the context.		

Table 3: Target groups and safety responsibility

2. Product description, Operation

Sonair ADAR One is a 3D ultrasonic device designed to detect objects, body parts, or persons within a configurable protection volume. It delivers safeguarding in industrial and mobile applications, particularly on **autonomous mobile robots (AMRs)** and **stationary safety-critical machinery** and at the same time ensures high machine productivity.

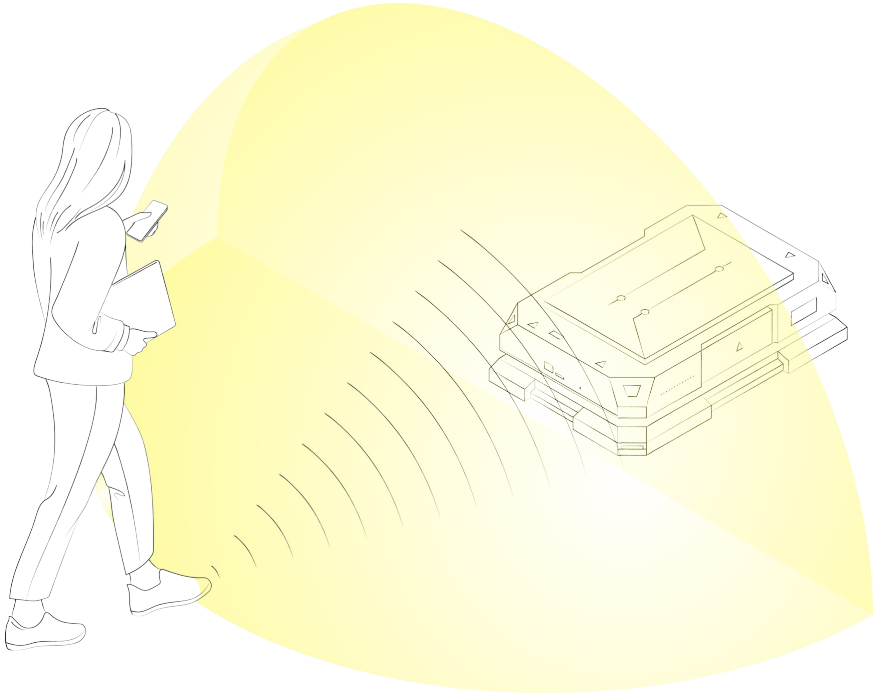

Figure 1: Illustration: ADAR working principle

2.1. Operating principle

ADAR uses an array of ultrasonic transducers to determine the location of objects within its detection volume:

1. The received signal is measured by an array of receive elements.
2. The distance to an object is determined by the difference in time of emission and time of arrival.
3. The angular position is found from the difference in time of arrival on the different receive elements.

The system constructs a 3D point cloud from every pulse, compares these points to a selected protective zone, and triggers a safe output (OSSD) if an intrusion into the zone is detected.

Reflection of ultrasound by objects

Acoustic reflection of ultrasound is caused by the difference in density and stiffness of the object and that of air. This difference is huge for most materials. So in practice all materials will reflect ultrasound. But the strength and direction of the reflected soundwave will depend on the surface of the object.

Surfaces with a roughness below one millimeter can be considered smooth and will reflect the sound like a mirror reflects light. The smoother the surfaces, the better the reflectivity. Very rough surfaces such as porous materials reflect sound poorly.

The strength of the signal will depend on the size of the area which can be considered flat on a millimeter scale around the point of reflection. Therefore, a large cylinder will give a stronger signal than a small cylinder and a ball will give a weaker signal than a cylinder with the same radius.

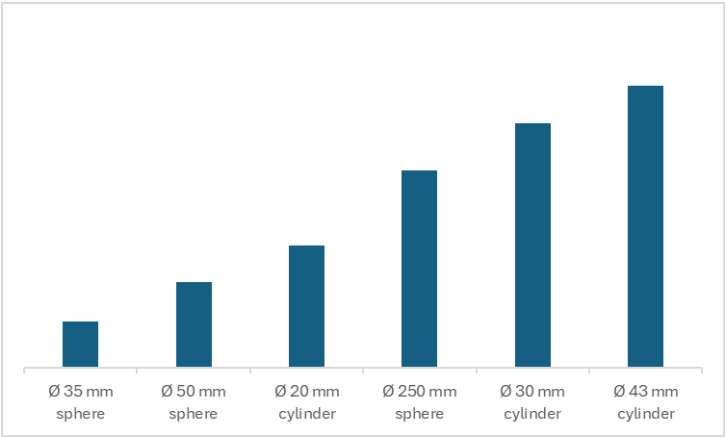

Figure 2: Relative signal strength of different objects at same distance

Relevant quality properties of ADAR

ADAR transmits the sound waves as a circular wave in all directions. You can imagine it as the wave propagation around a stone thrown into water. The receiver array receives the reflected sound on various offset microphones and can determine the direction of the received sound by the phase shift. A special beam forming algorithm finds reflections of significant enough strength and identifies them as point-like hits on an object.
The positions of the detections are therefore calculated from analog signals and do not result from a fixed sampling grid, as is the case with LiDAR, for example, which emits discrete laser beams.

The **smallest detectable object** is determined by the strength of the acoustic reflection, which depends not only on size but also on surface texture and shape. Therefore the property "resolution" does not exist for ADAR.

Mirror images from multi-path reflections

The reflected sound from surfaces that are normal to the direction the device is pointing in will echo back and be detected.

The part of the object that is closest to the device will always have its surface oriented normal to an imaginary line connecting it to the device. As a result, this point consistently reflects sound directly back to the device.

ADAR may detect mirror images of points when sound reflects off multiple surfaces. However, these mirrored reflections will always have a longer ToF and therefore appear farther away than the actual object they originate from, and will seem to lie behind the reflecting surface of the object. Therefore, they will not cause false activation of the protective zone.

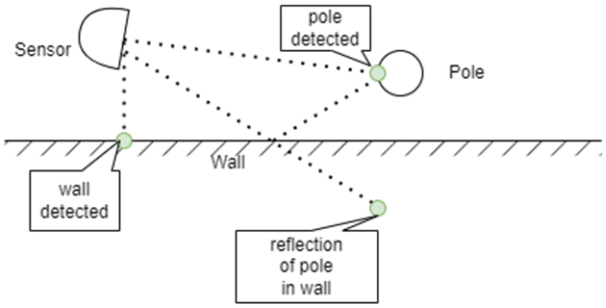

Figure 3: Illustration of mirror images

Bird's eye view of example scene with data output as green dots.

2.2. Safety function

ADAR's safety function is to detect if person(s), body parts or hazardous objects larger than the detection capability are present in a protective zone and de-energize safe output.

ADAR does not, by itself, remove hazardous energy from the machine. Achievement of the safe state at system level requires correct integration with a safety control system and a final switching device.

The response time of ADAR is the time elapsed from the moment a person, body part or hazardous object enters the defined protective zone until ADAR enters the safe state.

2.3. Safe state, safe output and fault reaction

The safe state of ADAR is:

Safe output de-energized (at least one OSSD in the OFF state).

Upon detection of an intrusion into the protective zone, or upon detection of an internal fault affecting the safety function, the safe outputs transition to and remain in the safe state.

ADAR provides redundant outputs, implemented as two independent OSSD channels.

Both OSSD outputs de-energize when an intrusion into the protective zone is detected.

When a detected object leaves the protective zone, the OSSD outputs remain de-energized. After the latch time, if no object is present in the protective zone and no fault is detected, the outputs re-energize automatically.

Upon a fault, the OSSD outputs:

- de-energize when internal faults affecting the safety function are detected,
- de-energize upon an illegal or undefined input,
- de-energize on detected fault on OSSD channel (at least one)

Loss of power to the protective device results in de-energized outputs.

2.4. Disabled state

ADAR can be disabled and enabled with commands issued over the user interface. In disabled state, ADAR is in safe state (OSSD is de-energized) and no ultrasound is emitted.

2.5. Basics of detection capability

Some objects are more difficult for ADAR to detect.

Notice

Objects of certain characteristics are difficult to detect, as explained below.

If such objects are part of the machine's risk assessment, application-specific tests must be conducted to verify detection capability.

The following object types are known to present challenges:

Materials absorbing ultrasound

Materials such as open-core foams, rough fibrous materials and feathered fabrics will absorb ultrasound. This results in an attenuated signal and reduced detection probability.

Sharp-edged objects

Objects featuring sharp corners, thin edges, or narrow profiles typically reflect sound inefficiently. Because ultrasonic detection relies on surface reflection, these geometries can result in weak echoes or no return signal at all. If an object, such as a sharp edged box, presents sharp corners towards the sensor, large flat surfaces pointing in other directions will not contribute to the signal. This situation is illustrated below.

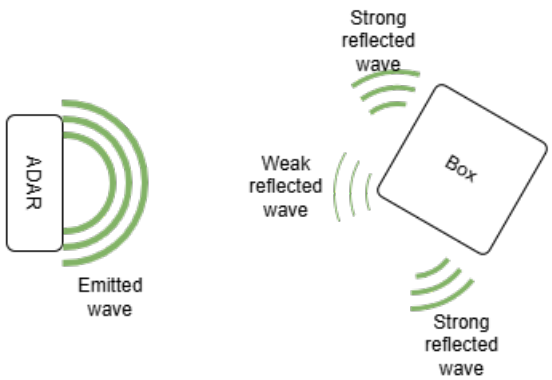

Figure 4: Illustration of how sharp edged objects can reflect ultrasound poorly when approached from certain angles. Arbitrary scale.

The strength of the reflection back to sensor will be the same as that of a cylinder with the same radius as the corner.

2.6. Device overview

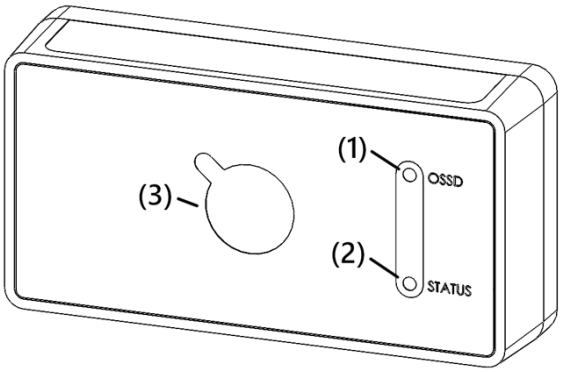

Figure 5: ADAR front view

(1) OSSD indication LED (green / red)
(2) status indication LED (green / yellow)
(3) sensor area

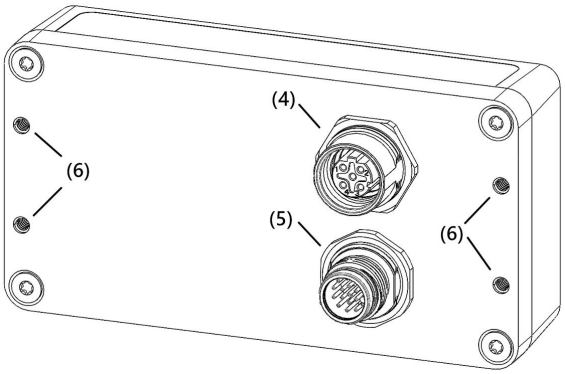

Figure 6: ADAR back view

(4) M12 receptable for Ethernet 100BASE-TX
(5) M12 receptable for power supply and I/O lines
(6) 4xM4 threads for mounting
The type label is located on the bottom of ADAR.

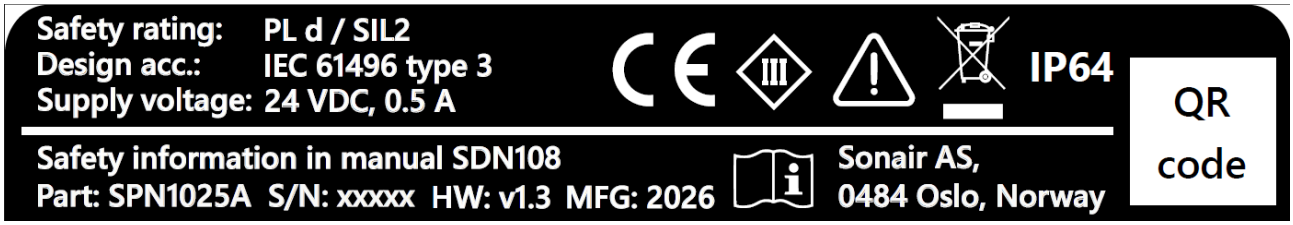

Figure 7: Example of ADAR type label

2.7. Device coordinate system

ADAR defines a consistent 3D coordinate system that serves as the spatial reference for zone configuration, field shape interpretation, and physical alignment.

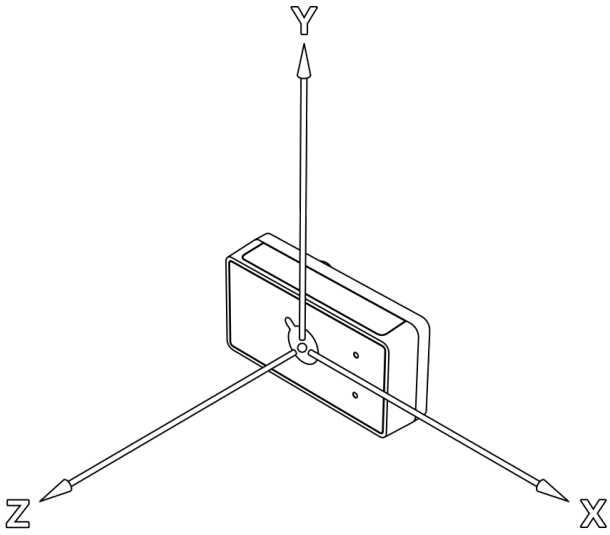

Figure 8: ADAR's coordinate system

The coordinate system's origin is the geometric center of the front face. It follows a right-hand Cartesian convention:

- **Z-axis**: Points forward, perpendicular to the front face—this is the main detection axis.
- **X-axis**: Points laterally to the left when facing the same direction as the Z-axis.
- **Y-axis**: Points upward, perpendicular to the ground plane.

2.8. Status indicators and their meaning

There are two LED status indicators on the front face of ADAR.

Condition	OSSD LED behavior	Status LED behavior
No detection in protective zone	Green (stable)	-
Detection in protective zone	Red (stable)	-
No detections in any warning zones	-	Green (1 Hz blinking)
One or more detections in warning zones	-	Yellow (stable)
System error	Red (1 Hz blinking)	Yellow (1 Hz blinking)
System fault	Red (2 Hz blinking)	Yellow (2 Hz blinking)
Device in disabled state	Red (stable)	Green (0.5 Hz blinking)
Device in config state	Red (stable)	Green (0.66 Hz blinking)

The LED status indicators shall not be used to implement or substitute the safety function.

2.9. Types of sensing zones

ADAR detects objects in predefined zones. A total of 128 zone pre-sets can be created. One safety zone and two warning zones can be preconfigured in each pre-set. A pre-set can be activated in the normal operations mode via the digital inputs. An object in the safety zone then triggers the corresponding safety function, meaning the OSSD outputs are switched off. An object within a warning zone switches on the corresponding warning output. The warning outputs are automation functions and do not meet any safety performance level.

3. Technical specifications

3.1. Features

General	
Technology	Ultrasonic time-of-flight with 3D point cloud determination
Ultrasonic frequency	65-85 kHz
Frame rate	13-18 Hz
Response time	≥ 112 ms see Response time
Coexistence codes	4
Number of simultaneously monitored zones [1)]	3
Number of zone presets [1)]	128
Floor suppression	adjustable sensitivity
Max. speed of detectable objects [2)]	5 m/s
Boot up time safety function (time to OSSD ready)	≤ 4 s
Boot up time automation function (time to Ethernet communication ready)	≤ 20 s
Full field-of-view (point cloud / automation function)	
Opening angle (Θ_D)	0-90°
Range, (R_D)	0-4 m
Range accuracy + precision [3)]	2-10 cm
Angular accuracy + precision [3)]	0-45°: ~3° 45-70°: ~6° 70-90°: > 10°
Safety related detection volume to detect limbs - see Detection capability (Figure 9)	
Range (R_D) at opening angle (Θ_D)	0-2.5 m at 0-60° 0-1.5 m at 0-80°

Detection of human body part	legs: ≥ Ø70 mm
Protective zone safety supplement (S_{ADAR})	Safety supplements (Section 4)
Safety related detection volume to detect torso - see Detection capability (Figure 9)	
Range (R_D) at opening angle (Θ_D)	0-3 m at 0-75° 0-2 m at 0-80°
Detection of human bodies	torso: ≥ Ø155 mm
Protective zone safety supplement (S_{ADAR})	Safety supplements (Section 4)
Safety related detection volume to detect hazardous objects - see Detection capability (Figure 9)	
Range (R_D) at opening angle (Θ_D)	0-3 m at 0-60° 0-1.5 m at 0-80°
Minimum object	Proven with test object: Ø30 mm cylinder, acoustically hard surface
Protective zone safety supplement (S_{ADAR})	Safety supplements (Section 4)

Table 4: Technical specifications

[1] 1x safe protective zone, 2x warning zones per preset.
[2] Relative speed between objects and sensor
[3] Average values. Accuracy depends on a number of environmental factors and may vary in extreme cases.

3.2. Safety properties

The safety properties in this section shall be used for system-level safety analysis, integration, and verification. They define the limits within which ADAR may be used as a safety-related part of a control system.

Danger

The safety properties listed in the tables shall be used unchanged for system-level calculations. Use of values other than those specified in the table is not covered by this user manual.

Property	Value
IEC 61508:2010	
Safety integrity level (SIL)	SIL 2
Element type	Type B
Mode of operation	High demand
Systematic capability	SC 2
HFT	0
Diagnostic coverage	95 %
Safe failure fraction (SFF)	95 %
ISO 13849:2023	
Performance level (Pl)	PL d
Category	2
PFH_D	1.50×10^{-7} 1/h
$MTTF_D$	38 years
Mission time	20 years
IEC 61496:2020	
Type of ESPE	Type 3
Demand rate	4 /hour

Table 5: Safety properties

Failure mode	Failure rate	Fault detection and reaction time	Fault reaction
Internal critical failure	λ_{DD} 2801 FIT	< 1 s	At least one OSSD OFF
Object within protective zone is not detected (undetected internal fault)	λ_{DU} 150 FIT	-	-
Loss of diagnostic	λ_{diag} 87 FIT	< 1 s	At least one OSSD OFF
Safe undetected	λ_{safe} 394 FIT	-	-
Total	λ_{total} 3345 FIT		
Loss of detection capability is detected within the response time.			

Table 6: Failure modes, failure rates and fault reaction

3.3. Detection capability

The detection capability for limbs and torso is shown in the figure below, in addition to the full field of view of the device.

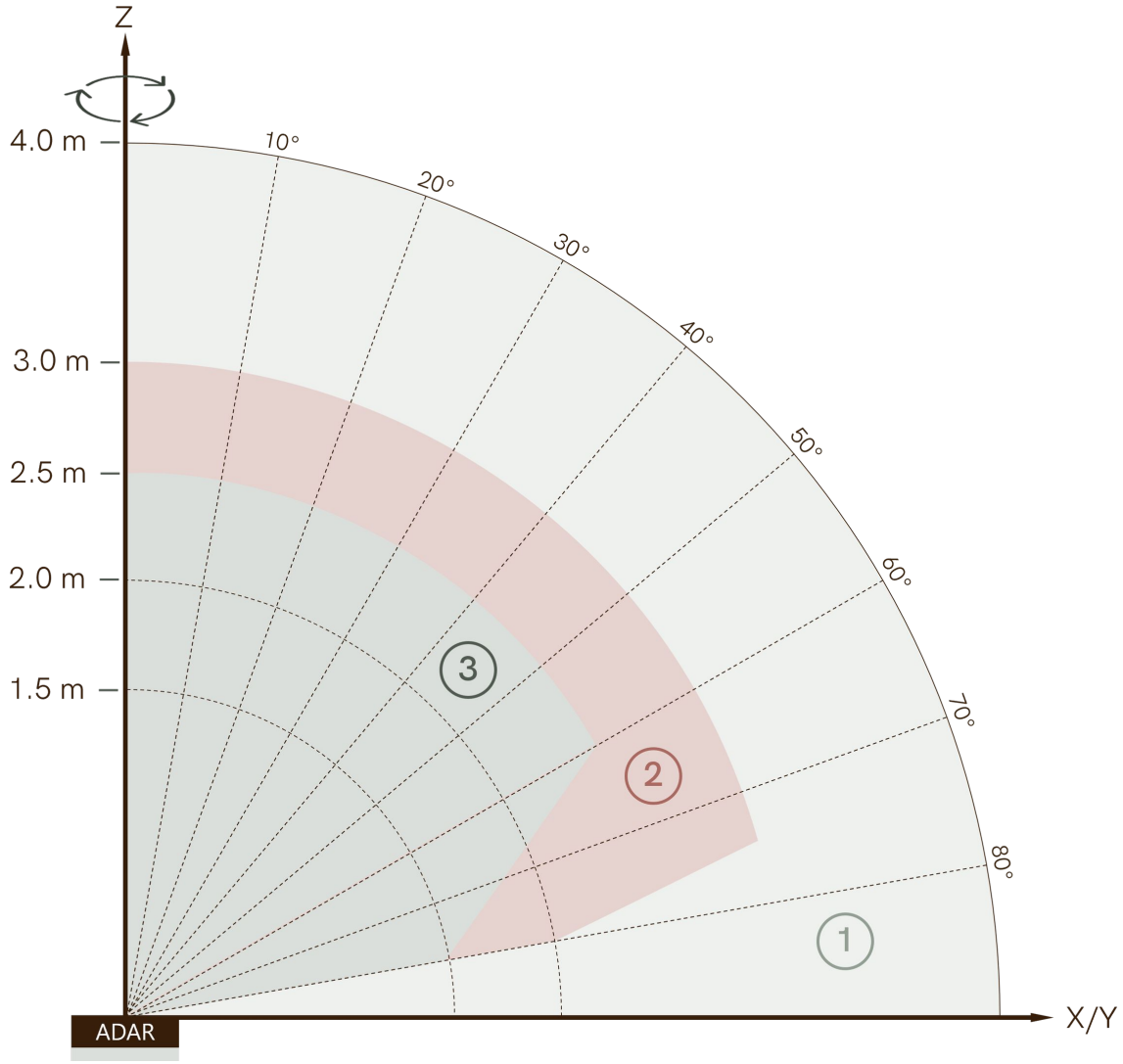

Figure 9: Detection capability within FoV

(1) Full field-of-view (point cloud / automation function)
(2) Safety related detection volume to detect torso
(3) Safety related detection volume to detect limbs

3.3.1. Detection of persons or part of the human body

The safe detectability of **persons** or parts of the **human body** was verified on the assumption that the body part to be detected exposes at least one of the following surfaces:

- Bare skin
- Typical everyday / working clothing represented by two layers of corduroy
- Leather (shoes)

Detection of legs

- Proven by a cylinder with a diameter of 70 mm and 2 layers of corduroy fabric.

According to general technical rules, this corresponds to at least the lower leg of persons older than 14 years of age.

Detection of torso (full body)

- Proven by a cylinder with a diameter of 155 mm and 2 layers of corduroy fabric.

According to general technical rules, this corresponds to at least the lower thigh and the side view on the torso of persons older than 14 years of age.

Danger

Probability of detection may be reduced when individuals wear clothing made of highly sound-absorbing materials such as fur, faux fur, or other extremely acoustically soft fabrics. If this cannot be ruled out, application-specific tests must be conducted to verify detection capability.

3.3.2. Constraints related to relative speed of objects

The safety function may be influenced by the movement of objects within the detection volume.

The following conditions shall be considered when designing the safety application. If these conditions are not respected, the safety function may be degraded or the device may generate spurious trips.

- The relative speed between ADAR and objects within the protective zone shall not exceed 5 m/s.
- The relative rotational speed between ADAR and objects shall not exceed 30°/s.

3.3.3. Constraints related to availability of the machine function

Situations with excessive clutter or a very high number of detectable objects may increase the likelihood of spurious trips.

3.4. Response time

The response time is the worst case time between the occurrence of the event leading to the sensor’s response and the reaction on output(s), meaning the time between an object’s entrance into the protective zone and the OSSD achieving OFF state.

The device's response time depends on user-configurations to balance response time and robustness.

- The N Hysteresis configures how many additional pings an object must be detected in before the safety output is updated.
- The number of coexistence retries determines how many pings with interference from other ultrasound sources are tolerated before transitioning to a safe state.
- The frame rate depends on the selected transmission code.

Where configuration options allow different response times, for example when different transmission codes are used, the slowest applicable response time shall be used for calculation and validation of the overall system response time.

To use the table to determine the ADAR's response time first add the values of the N hysteresis and the coexistence retries used in the configuration.

N Hysteresis + coexistence retries	Transmission code (frame rate)			
	0 (18 Hz)	1 (16 Hz)	2 (14 Hz)	3 (13 Hz)
0	112 ms	125 ms	143 ms	154 ms
1	167 ms	188 ms	215 ms	231 ms
2	223 ms	250 ms	286 ms	308 ms
3	278 ms	313 ms	358 ms	385 ms
4	334 ms	375 ms	429 ms	462 ms
5	389 ms	438 ms	500 ms	539 ms

Table 7: Determination of ADAR's response time

3.5. Interfaces

Description	Implementation	Function
Safe output	1 OSSD pair	Safe state
Additional outputs	2 digital outputs	State of warning zones
Safe inputs	11 digital inputs, safe by redundancy	Control of presets
Data interface	1 Ethernet 100Base-TX (CoAP over UDP/IP)	• 3D point cloud • Configuration • Status monitoring
Display elements	2 dual color LEDs	• OSSD status • System and warning zone status

Table 8: ADAR's interfaces

3.6. Environmental conditions

Danger

The specified detection capabilities are valid only when the protective device is operated within the specified environmental conditions defined in this section. Operation outside these conditions may reduce detection capability.

Parameter	Specification
Operating temperature	0°C to +50°C
Storage temperature	-20°C to +60°C
Air humidity	10-95 % RH
Electromagnetic compatibility	IEC 61496-1, IEC 61000-6-1, IEC 61000-6-2, IEC 61000-6-3, IEC 61000-6-4
Enclosure ingress protection	IP 64
Vibration	IEC 61496-1, IEC 60721-3-5 class 5M1
Shock	IEC 61496-1, IEC 60721-3-5 class 5M2 IEC TR 60721-4-3 class 3M7
Max operating altitude	2300 m

Table 9: Environmental conditions

3.7. Electrical data

Parameter	Specification
Supply voltage[1)]	24 V DC (18 V to 28 V DC) (PELV)[2)]
Supply current (maximum output load)	0.7 A
Supply current (no output load)	0.3 A
Power consumption	5 W

Parameter	Specification
[1]Device may enter safe state upon voltage dips below 18V. Device recovers after voltage dips without user intervention. If additional tolerance to power interruptions is needed, this must be provided at the power supply. [2] PELV can be realized with a SELV power supply by connecting 0V output to protective ground (PE).	

Table 10: Supply voltage

Zone select input characteristic	Specification
Input voltage LOW[1]	0 V to 5 V
Input voltage HIGH	11 V to 30 V
Input current LOW	0 mA to 2 mA
Input current HIGH	2 mA to 3 mA
Maximum zone switching event duration	5 ms
Minimum interval between zone switching events	1x configured response time
New protective zone active after valid switching event	Within configured response time
[1]Unconnected inputs are interpreted as logic LOW	

Table 11: Zone select input specification

OSSD/WARNING characteristic	Specification
Output type	High-side current-sourcing output with short-circuit protection. 2 mA current sink at receiver side is required (24V DC current sinking digital input according to IEC61131-2). The receiving circuit shall share a common reference potential (0 V).
ON-state voltage	+17 V to +30 V
OFF-state voltage	< 2V
Max output current (per line)	100 mA
Max power output	12 W
Min resistive load	300 Ω

OSSD/WARNING characteristic	Specification
Max capacitive load	20 nF Higher load possible if higher current sink is applied.
Max inductive load	100 µH
Leakage current	< 0.1 mA
OSSD test pulse width	0.4 ms
OSSD test pulse frequency	13-20 Hz depending on transmission code used
OSSD1 - OSSD0 delay	>0.4 ms
Latch	0.5 - 1.0 s

Table 12: OSSD characteristics

3.8. Mechanical design and dimensions

Dimensions	Height 54 mm, width 104 mm, depth 25 mm, excluding connector and cables
Weight	0.2 kg
Housing material	Aluminium and polymer

Table 13: Mechanical specifications

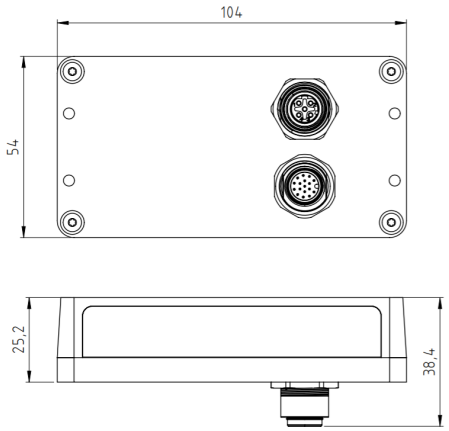

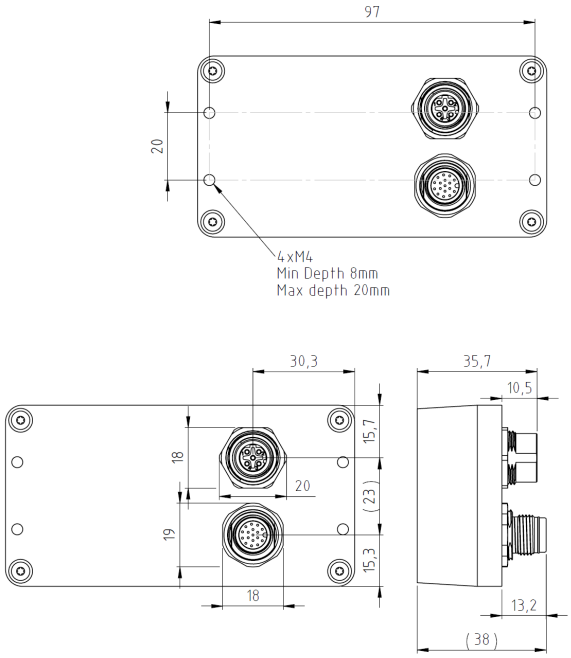

Figure 10: Connector and mounting hole position

4. System design

A correct integration is fundamental to the performance and safety of ADAR. This section explains how ADAR shall be integrated into a machine intended for a specific application. This section is therefore aimed in particular at system designers and safety engineers for the machine.

A central principle of protective zone design is that the zones must be large enough that no hazardous contact can occur before the machine reaches a safe state. If the detection volume of a single ADAR cannot cover the hazard, multiple ADAR devices can be used. The protective zones of all devices shall together cover the full hazard as defined by the risk assessment.

The intended movement of the machine is not known to ADAR. The safety function therefore relies on the correctness and purposefulness of the configured protective zones and the zone selection applied by the safety controller.

Two terms are used throughout this section:

The **nominal protective zone** is the zone boundary determined by the machine risk assessment. It is the boundary the safety case relies on.

The **configured protective zone** is the zone entered in ADAR Designer: the nominal protective zone extended by the safety supplements, together with the geometry given by the zone configuration method (extruded polygon, vertex rules).

Danger

ADAR evaluates detections against the configured, active protective zone only and has no notion of the detection volumes: a detection inside the configured zone de-energizes the safe output regardless of whether it occurs inside or outside a detection volume. ADAR therefore cannot ensure the correctness of the shape and dimensions of configured protection zones. It is the responsibility of the system designer to design zones according to this section and to verify the correct upload to ADAR by review of the configuration report, as described in 7.1 Verification of configuration .

Two further terms are used for the timing of the safety function (definitions per ISO 13855:2024):

The **response time** is the maximum time between the occurrence of the event leading to the actuation of the safeguarding device and the achieving of its intended function. For ADAR, this is the configured response time of the device.

The **overall system response time** is the time between the actuation of the sensing function and achieving the intended risk reduction. It comprises the response time of ADAR, the response times of the other parts of the safety-related control system, and the time until the machine has stopped or the risk is otherwise reduced.

Danger

The protective zone dimensions depend on the overall system response time. The zones must be large enough that no hazardous contact can occur during this total response time, accounting for the approach speed of persons and, where applicable, the speed of the machine itself. Using only ADAR's response time will result in undersized protective zones.

About this Section 4

The sections

- 4.1 Minimum zone thickness due to sampled detection
- 4.2 Polygon design rules

provide general information about protection zone design applicable to all types of applications.

The section

- 4.3 Protection zone dimensioning for horizontal sensor view

provides all guidelines for applications in which ADAR is mounted horizontally. This applies to both stationary and mobile applications.

The sections

- 4.4 Protective zone design for detection of persons in stationary applications
- 4.5 Detection zone design for detection of persons in the path of a mobile robot

each contain specific information on the design of protection fields in stationary and mobile applications, respectively. These sections also include examples that summarize the general procedure.

The sections 4.6 - 4.10 provides general information about the application and integration of ADAR.

4.1. Minimum zone thickness due to sampled detection

Detection is sampled, not continuous. Any protective zone that is thin in the direction of crossing can be passed between two consecutive samples if it is too thin relative to the crossing speed. The minimum thickness therefore applies to every zone boundary that persons or hazardous objects can cross at speed; vertical access protection is a common case and is used as the example below.

In vertical access protection applications, the protective zone must be of a certain thickness "T" so that a crossing person remains inside the zone until the safe output switches. If zones with small thickness are used, it is recommended to create them parallel to the z-axis. A thin zone oriented obliquely or perpendicular to the lines of sight extends to larger polar angles, where larger safety supplements apply, and the configured zone grows accordingly.

The thickness T applies to the nominal protective zone; the safety supplements (Safety supplement distribution (Figure 21)) shall be added in addition.

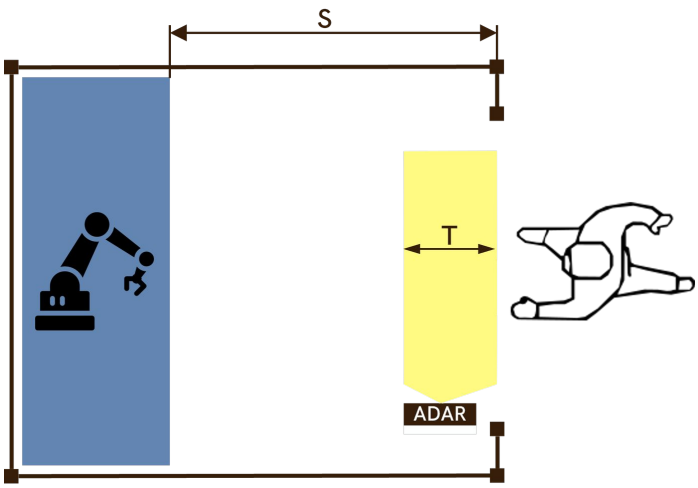

Figure 11: Access protection

T_{calc} = K x 1/F x N - B **If** T_{calc} < 100 mm **then** T = 100 mm **else** T = T_{calc}	**T_{calc} = 1600 mm/s x 1/18 x 1 - 180 mm = -91 mm** **-> T = 100 mm** **T_{calc} = 1600 mm/s x 1/18 x 4 - 180 mm = 176 mm** **-> T = 176 mm**	
Whereby:		
K = approach speed	1600 mm/s	*normative*
F = frame rate	depending on transmission code: 13Hz or 14Hz or 16Hz or 18Hz	*exemplary (ADAR spec)*
N = N Hysteresis	0 or 1 or 2 or 3 or 4	*exemplary (ADAR configuration)*
B = min. body depth	180 mm	*normative*

Table 14: Calculation of minimum thickness of vertical zone

4.2. Polygon design rules

ADAR requires free line of sight from the device origin to the object to be detected, and the detected reflection point lies on this line of sight. All parts of the nominal protective zone shall therefore have free line of sight to ADAR.

Danger

If a line of sight from the device origin exits and re-enters the protective zone, an object in the gap does not activate the safety function and shadows the zone behind it: a person inside the zone, behind the shadowing object, is not detected.

The straight line from the device origin to any point inside the zone shall remain entirely within the zone.

The rule is fulfilled in the vertical direction by the extrusion method; it constrains the polygon shape.

4.2.1. Inward indentations

Inward indentations in the nominal zone polygon are permitted only where:

- the line-of-sight rule above remains fulfilled (the indentation opens away from the device origin),
- the indentation lies beyond the near-sensor region z_{min}, see 4.3.2.1. Minimum zone length calculation.

A similar effect can be achieved with exclusion zones (section 6. Configuration and commissioning | Exclusion zones); the considerations in this section and the blind spot criteria (section 4. System design | Managing blind spots) apply equally.

If the indentation creates an unmonitored region from which the hazard can be reached, the blind spot criteria in section 4.2.4 apply; where they are not met, the risk shall be assessed, e.g. per the applicable C-standard.

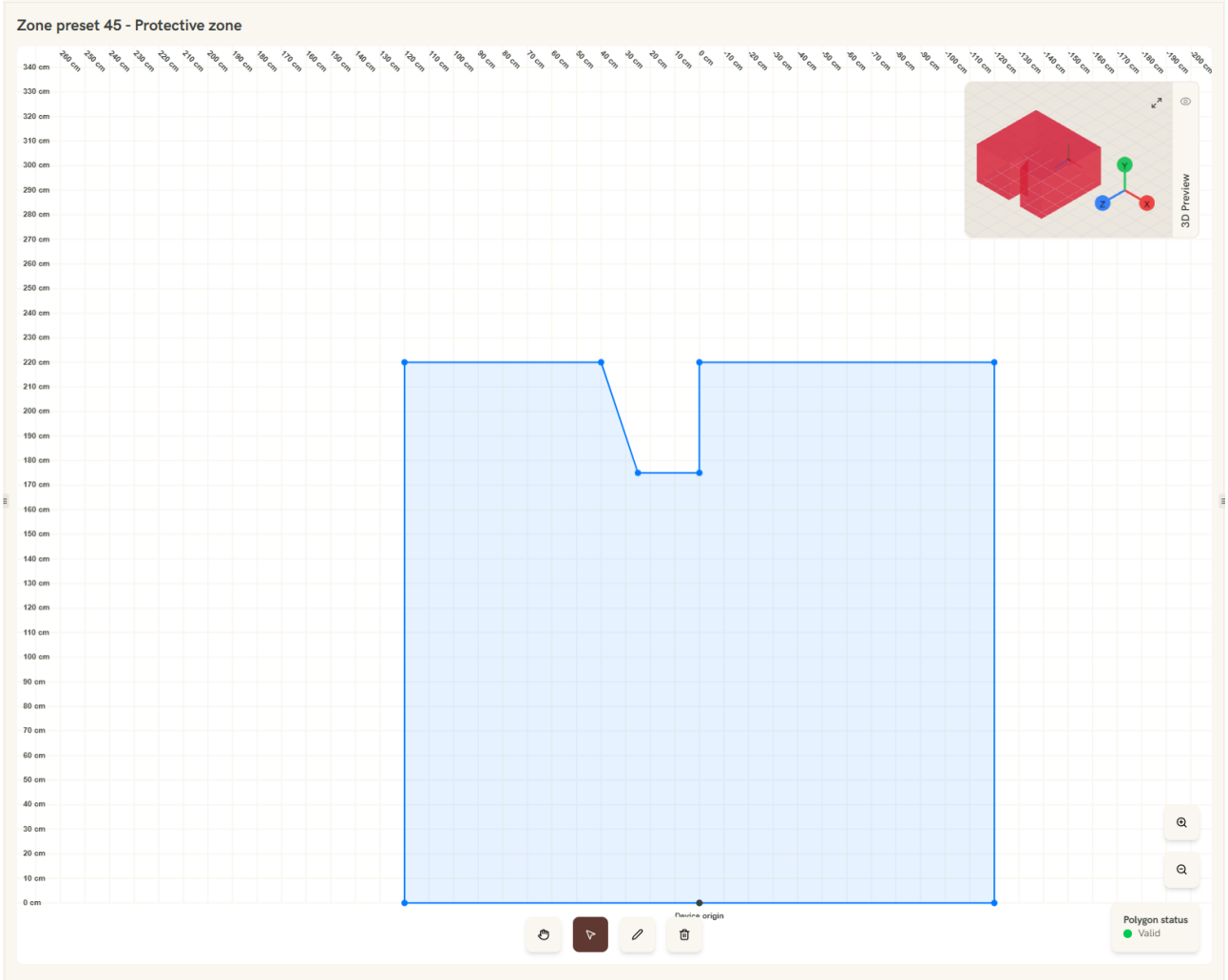

Figure 12: Inward indentations

4.3. Protection zone dimensioning for horizontal sensor view

In the horizontal sensor view, ADAR shall be mounted with its front face vertical and the y-axis pointing vertically upward. See ADAR's coordinate system (Figure 8).

4.3.1. Zone heights and sensor positioning

The sensor shall be mounted at a height between 0.1 m and 1.4 m above the floor (Zone heights and sensor positioning (Figure 13)). The **distance to floor** parameter shall be set to the actual mounting height of the device; detections below the configured value are ignored, so a wrong value may result in persons or objects going undetected. See section 6. Configuration and commissioning | Distance to floor.

With the distance to floor correctly configured, protective zones can be extended down to the floor. Reflections from the floor may then cause nuisance trips, depending on the quality and texture of the floor, the parallelism of the mounting, and the nodding motion of a mobile robot. The **suppress floor detections** sensitivity can be adjusted to reduce these without affecting the effectiveness of the safety function, see

section 6. Configuration and commissioning | Suppress floor detections. If nuisance trips persist, the protective zone can be lifted off the floor plane — note that this changes the zone type and the detected body areas, as follows.

The zone type follows from the zone's position relative to the floor and the applicable detection volume:

- **Zones of type 1** — floor contact, within the detection volume for limb detection. Detect the instep, ankle, and lower leg. Detection of the tip of the foot is not guaranteed, see 4. System design | Supplement for protruding body parts.
- **Zones of type 2** — lifted off the floor (floor suppression has no effect), within the detection volume for limb detection. Detect the lower leg and knee. The instep and ankle are not detected; the risk assessment shall confirm this is acceptable.
- **Zones of type 3** — reaching into the detection volume for torso detection. Detect the thigh and the torso.

The zone and sensor heights shall comply with the constraints in Zone heights (Figure 13).

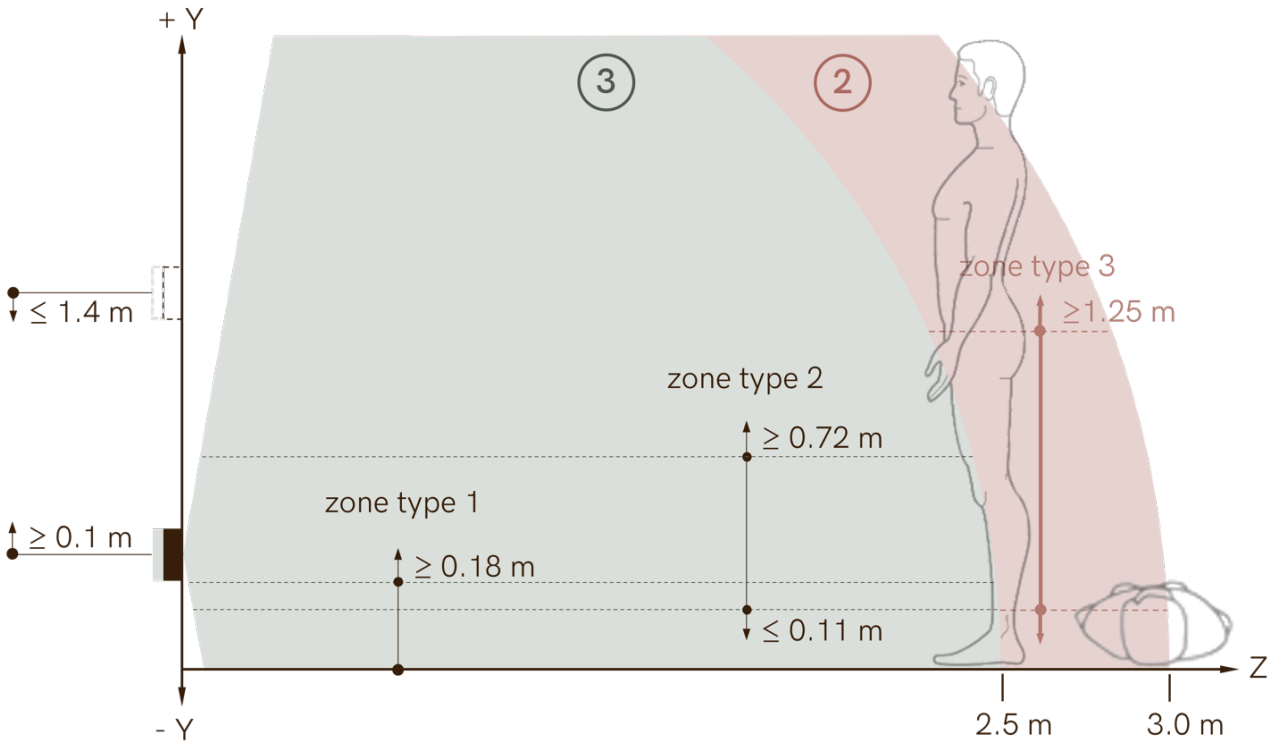

Figure 13: Zone heights and sensor positioning

(2) Safety related detection volume to detect torso
(3) Safety related detection volume to detect limbs

4.3.2. Minimum and maximum protective zone dimensions

A protective zone and the detection volume have fundamentally different shapes. The design rules in this section exist to manage that mismatch.

> **Notice**
>
> The safety function is ensured only in the parts of the protective zone that lie within the detection volume of the applicable detection scenario.
>
> The checks in this section apply to the **nominal** protective zone

The zone's geometry is described by vertices, each vertex with its positions (V_x, V_y, V_z).
In ADAR Designer V_x and V_z are defined by the polygon in each preset view and V_y corresponds to the Zone top and Zone bottom parameter.

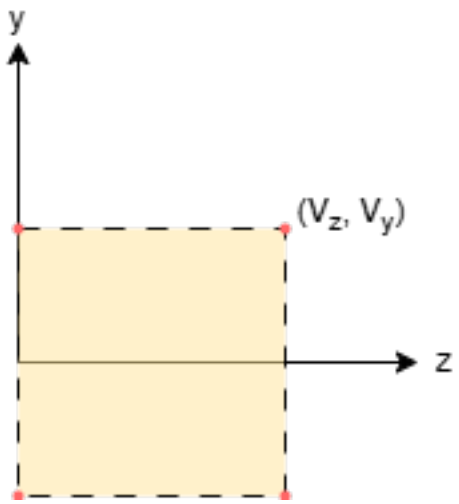

Figure 14: Illustration of a non-cuboid protective zone, its vertices, and the bounding box around the zone. Left: Seen from the side. Right: Seen from above.

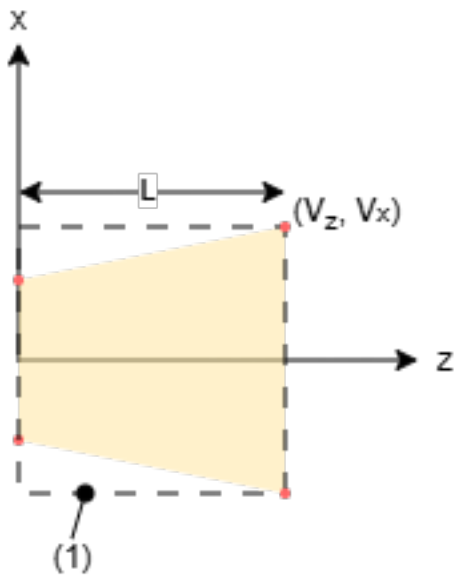

Figure 15: Bounding box around protective zone

L = Length
(1) = Bounding box

The detection volume is a hemisphere-capped cone, which opening angle θ_D and maximum range R_D depends on the detection scenario, see Technical specifications (Table 4) and Detection capability within FoV (Figure 9). This volume will limit the shape of the protective zone's geometries in some dimensions;

- *Outside the cone near the sensor* — close to the sensor, the cone has not yet opened up, so the near corners of any zone fall outside it, and detection is not ensured there. This cannot be eliminated, only

kept small. The protection zone must have a length equal to at least one safety supplement. This can be ensured by following the steps in Minimum zone length calculation and Check inward bending geometry

- *Beyond the opening angle* — a vertex outside the cone surface places parts of the protective zone where detection is not ensured. This can be checked by the angle condition in Vertex protrusion.
- *Beyond the maximum range* — a far vertex outside the hemispherical cap places parts of the protective zone where detection is not ensured. This can be checked by the range condition in Vertex protrusion.

4.3.2.1. Minimum zone length calculation

The opening angle of the detection volume, θ_D, makes it so that part of the protective zone will be outside the detection volume close to the sensor.

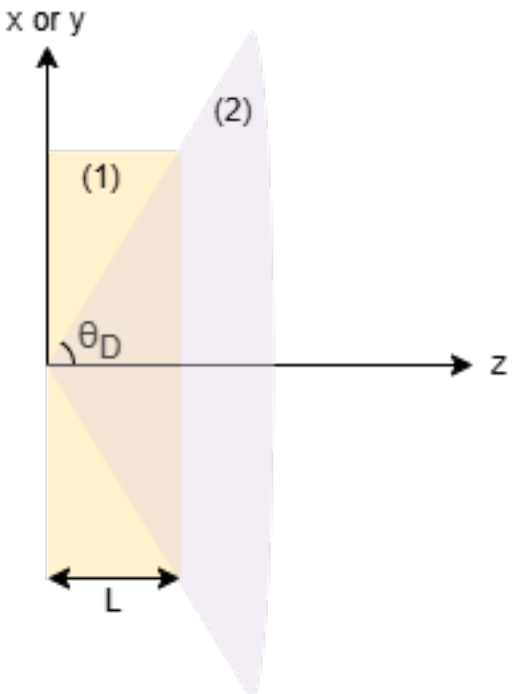

Figure 16: Illustration of the detection volume, the protective zone and its minimum length.

(1) Protection Zone

(2) Detection Volume

To ensure safe configuration of the protective zone, it must therefore be ensured that enough of the protective zone is inside the detection volume. First, draw a cuboid bounding box around the zone and find this box's length, L. Then check if

$$L \geq L_{min},$$

where L_{min} depends on the detection scenario - the zone type and the body part or object to be detected:

Detection scenario:	L_{min}
Hazardous object	1500 mm
Torso	776 mm
Limb	1250 mm

Table 15: Minimum zone length calculation

In the caseL > L_{min} : the zone is long enough to be safe. and the next check is not needed.

In the case L < L_{min} : the protective zone geometry must be checked further. Check z_{min} : The bounding box drawn around the protective zone is contained by 8 vertices, denoted (B_x, B_y, B_z). The tables in Appendix C show minimum z values for the bounding box vertices' B_z , given (B_x, B_y). For each bounding box vertex with B_z > 0, it must be ensured that

$$B_z \geq z_{min}$$

If this requirement is not fulfilled, the size of the zone must be increased.

4.3.2.2. Check inward-bending geometry

To avoid unsafe configuration, inward bending geometries are not allowed within the $z_{\min}$length, given in the tables in Appendix C. Outward bending geometry, or zone sides parallel to the axes, are allowed.

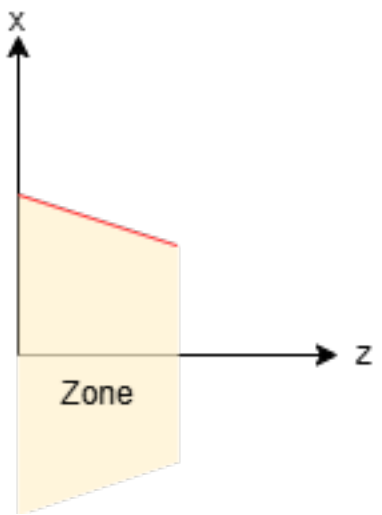

Figure 17: Illegal inward bended protective zone

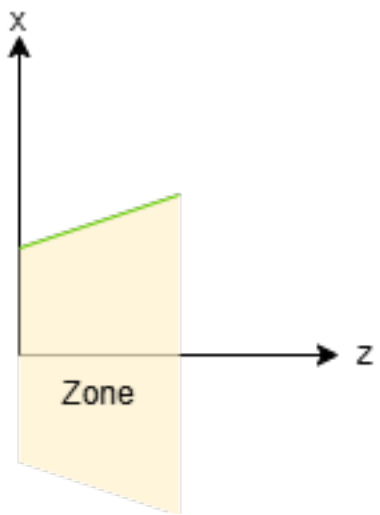

Figure 18: Legal, outward bended protective zone

4.3.2.3. Vertex protrusion

Due to the hemisphere-capped cone shape of the detection volume, it must be ensured that none of the vertices of the protective zones protrudes beyond the detection volume's maximum angle and range.

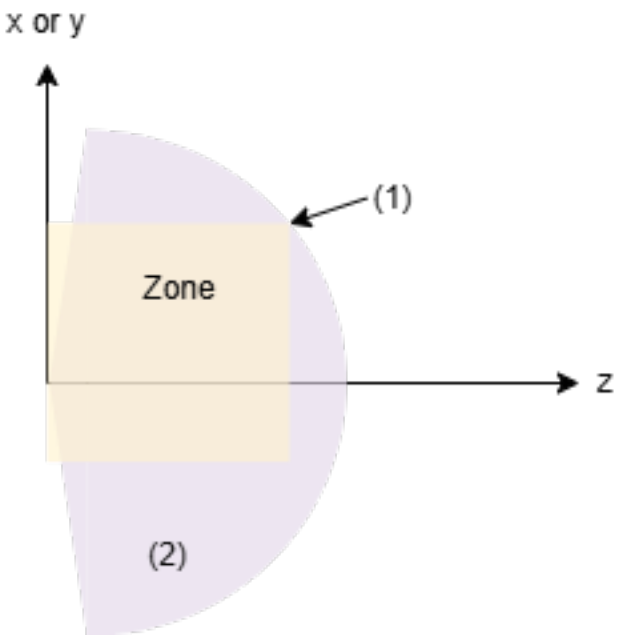

Figure 19: Vertex protrusion

(1) Intersection Point
(2) Detection Volume

For all vertices with $V_z > L_{min}$ it must therefore be checked that

$$V_x^2 + V_y^2 + V_z^2 \leq R_D^2$$

and that

$$\sqrt{V_x^2 + V_y^2} \leq V_z \tan \theta_D$$

where R_D is the maximum range at angle for a given θ_D, both given in Technical specifications (Table 4). When choosing which R_D and θ_D to use from the table, notice that R_D and θ_D are dependent on the $\text{range} = \sqrt{V_x^2 + V_y^2 + V_z^2}$.

4.3.3. Managing blind spots due to opening angle

Blind spots — regions adjacent to the protective zone from which the hazard can be reached but where detection is not ensured —can arise from the detection volume's opening angle near the sensor, from gaps to fixed structures, and from inward indentations (see section Inward indentations (Figure 12)).

D denotes the extent of the blind spot in the direction a person could occupy it.

For blind spots D ≤ 180 mm between the nominal protective zone and fixed structures, it can be assumed that no person can remain undetected.
For blind spots D > 180 mm on **stationary machines**, appropriate measures must be taken, such as mechanical structures that make it impossible for persons to stand in this area.
For blind spots with 180 mm < D < 500 mm in the direction of travel **on mobile robots**, the following routine is recommended when the robot restarts:

- An acoustic and/or optical signal indicate that movement is about to commence.

- Limit the robot speed to 0.3 m/s until the length of the gap (in the direction of travel) has been traversed.

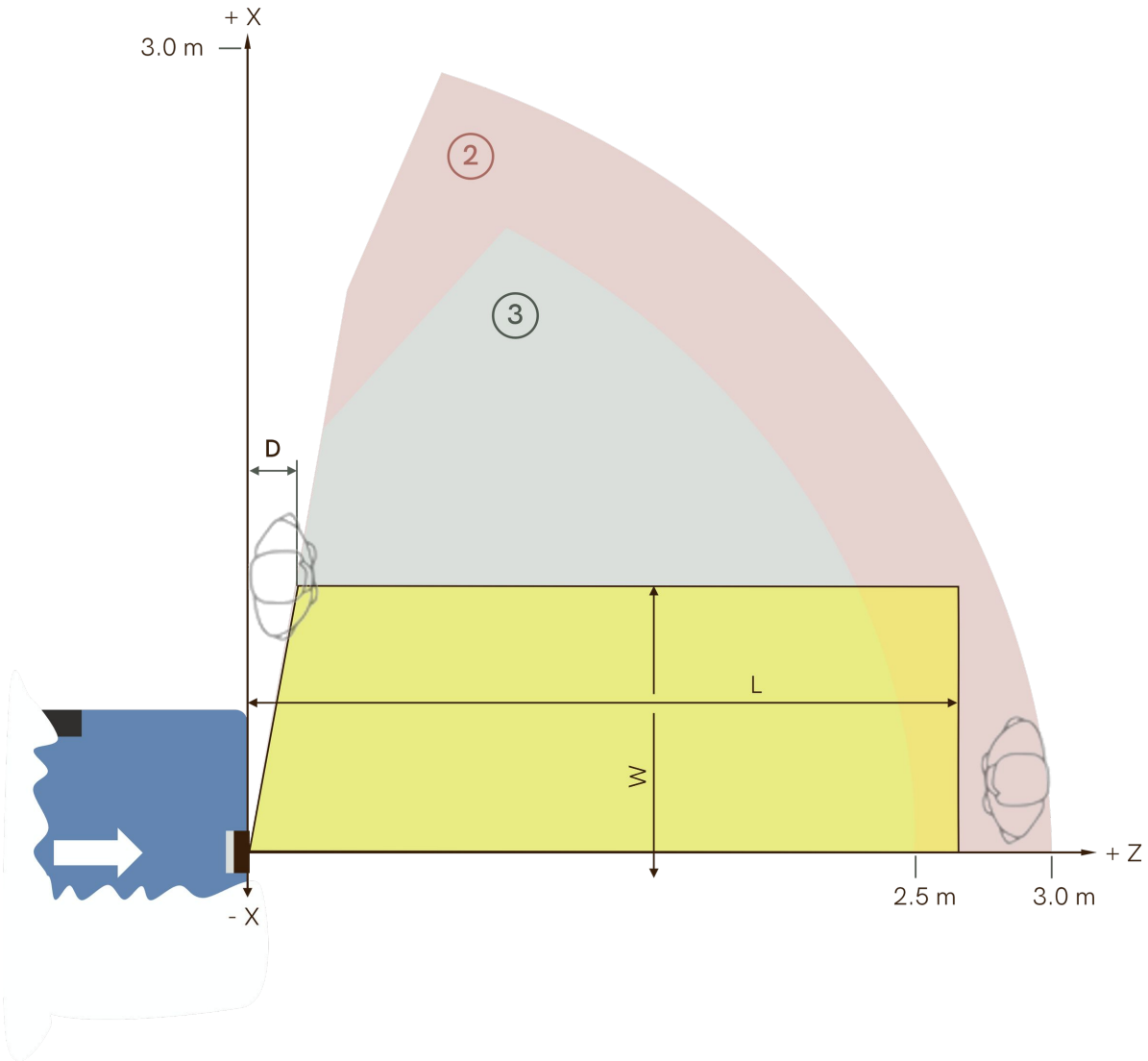

Figure 20: Managing blind spots due to opening angle

(2) Safety related detection volume to detect torso
(3) Safety related detection volume to detect limbs
L = length of the protection zone in the direction of movement
W = width of the protection zone orthogonal to the direction of movement
D = Blind spot distance

4.3.4. Safety supplements

Z (mm)

Z (mm)		X,Y (mm) 0	≤ 250	≤ 500	≤ 750	≤ 1000	≤ 1250	≤ 1500	≤ 1750	≤ 2000	≤ 2250	≤ 2500	≤ 2750	≤ 3000
≤ 3000	$S_{ADAR,x}$	157	157	158	159	160								
	$S_{ADAR,z}$	101	103	106	110	116								
≤ 2750	$S_{ADAR,x}$	144	144	145	147	148	150	151						
	$S_{ADAR,z}$	101	103	106	109	114	120	127						
≤ 2500	$S_{ADAR,x}$	131	132	133	135	137	139	141	143					
	$S_{ADAR,z}$	101	102	105	108	113	119	125	133					
≤ 2250	$S_{ADAR,x}$	118	119	121	123	126	128	131	133	135				
	$S_{ADAR,z}$	101	102	104	107	111	117	123	131	140				
≤ 2000	$S_{ADAR,x}$	105	107	109	113	116	119	122	124	210	210			
	$S_{ADAR,z}$	100	101	103	105	109	114	121	129	255	279			
≤ 1750	$S_{ADAR,x}$	92	95	99	103	107	111	114	188	188	188	188		
	$S_{ADAR,z}$	100	100	101	103	106	111	118	228	252	277	302		
≤ 1500	$S_{ADAR,x}$	80	84	89	95	100	104	166	166	167	167	167		
	$S_{ADAR,z}$	100	99	99	99	102	107	202	225	250	274	300		
≤ 1250	$S_{ADAR,x}$	68	75	82	89	95	145	146	147	147	147	147	147	
	$S_{ADAR,z}$	99	97	95	95	98	176	198	222	247	272	297	323	
≤ 1000	$S_{ADAR,x}$	57	68	79	87	125	127	129	129	130	130	162	159	
	$S_{ADAR,z}$	98	94	90	89	150	171	195	219	244	269	494	537	
≤ 750	$S_{ADAR,x}$	50	68	80	108	112	114	115	115	135	133	131	129	
	$S_{ADAR,z}$	96	88	81	124	144	167	191	216	403	$Z_n=0$	$Z_n=0$	$Z_n=0$	
≤ 500	$S_{ADAR,x}$	52	75	96	101	103	114	113	112	111	110	108	107	
	$S_{ADAR,z}$	90	76	98	116	138	270	$Z_n=0$	$Z_n=0$	$Z_n=0$	$Z_n=0$	$Z_n=0$	$Z_n=0$	
≤ 250	$S_{ADAR,x}$	72	92	100	101	101	101	100	100	100	100	100	100	
	$S_{ADAR,z}$	$Z_n=0$	$Z_n=0$	$Z_n=0$	$Z_n=0$	$Z_n=0$	$Z_n=0$	$Z_n=0$	$Z_n=0$	$Z_n=0$	$Z_n=0$	$Z_n=0$	$Z_n=0$	

45°

75°

Figure 21: Safety supplement distribution

4.3.4.1. Safety supplements in the y axis

The extrusion method inherently provides the angular supplement in the y-direction. No additional safety supplements need to be added to the height specifications defined in Zone heights and sensor positioning (Figure 13).

Exception: if greater heights than specified are selected, for example to form a barrier against overreaching or overstepping, the upper boundary becomes a boundary from which a person may enter the protective zone. The required supplement shall then be added to the zone top by the designer, read from Safety supplement distribution (Figure 21) using the zone's y- and z-coordinates — as demonstrated in the example in section System design | Example application: Presence of a person in front of a robot.

4.3.4.2. Safety supplements in the horizontal plane

In ADAR, the protection zones are defined by a polygon that is extruded upward and downward along the device's y-axis. The polygon is drawn by the user on the sensor's x-z plane in ADAR Designer. It is defined by several polygon vertices defined as $V_n(V_{x,n},\ V_{z,n})$.

A safety supplement must be added to the X and Z values of each vertex, as

$$V_{ns}(V_{x,n} + S_{\mathrm{ADAR},x},\ V_{z,n} + S_{\mathrm{ADAR},z}),$$

in accordance with Safety supplement distribution (Figure 21). The supplement is applied outward, away from the zone interior.

At inward indentations, the supplements are likewise applied outward from the zone interior — into the indentation, reducing it; the supplemented indentation must not be enlarged.

Due to large angular uncertainty at large angles, for any zone shape with vertices at angles greater than or equal to 75°, the zone must contain vertices at Z_n=0. This can be achieved by moving the existing vertex to Z_n=0, as shown in the figure below, or by adding new vertices. The method should be chosen so that the size of the zone is not reduced anywhere. The vertex positions where this applies are indicated by amber fields in the table above.

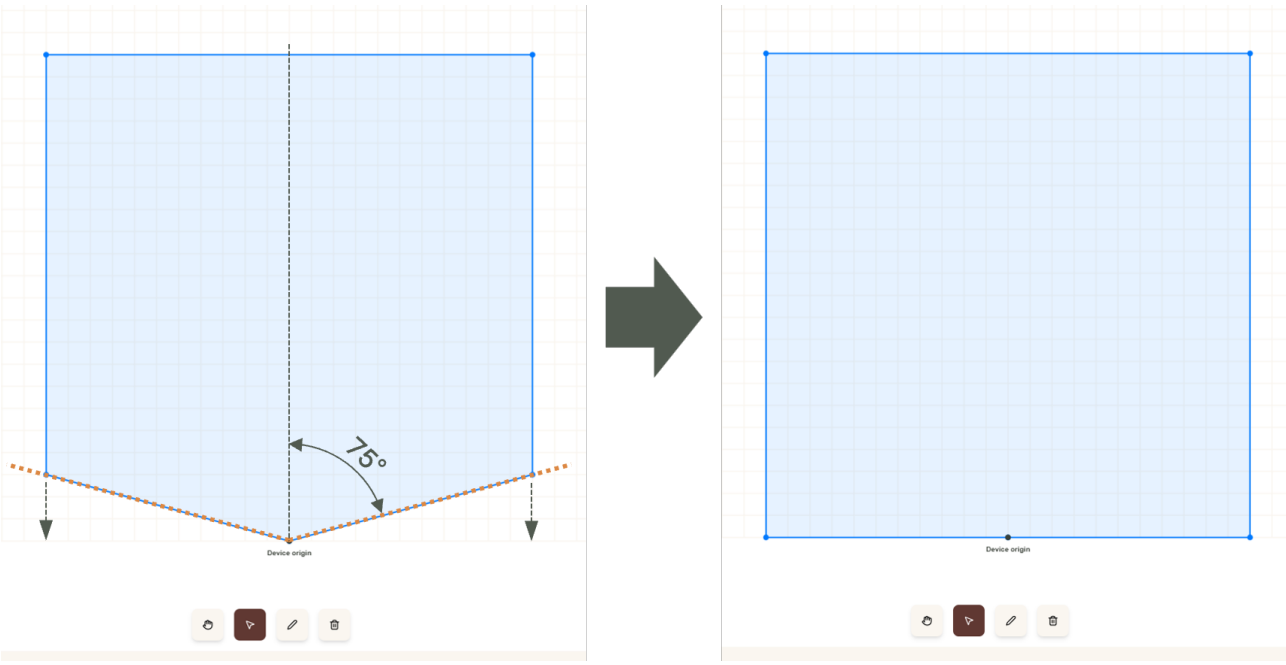

Figure 22: Supplement above 75°

4.3.4.3. Safety supplements considering the perspective error on body parts

The ultrasonic sensor detects surfaces of objects that are perpendicular to the direction of the emitted sound. Therefore, on round objects such as body parts, the sensor does not necessarily detect the point closest to the hazard. To account for this, a supplement, S_{persp}, must be added in the direction of travel (mobile robots) or the direction in which persons approach the protection zone (stationary machines) to compensate for the perspective shift of the detection point. S_{persp} must be applied in addition to the other supplements mentioned in this manual.

$S_{persp} = W / (L^2 + W^2)^{0.5} \times (H/15 + 35\ mm)$	
Whereby:	
W = width	max. distance from ADAR origin to protection zone corner, measured perpendicular to approach direction
L = length	max. distance from ADAR origin to protection zone corner, measured parallel to approach direction
H = height	top limit of protection zone above ground but max. 640mm

Table 16: Calculation: Supplement for perspective error

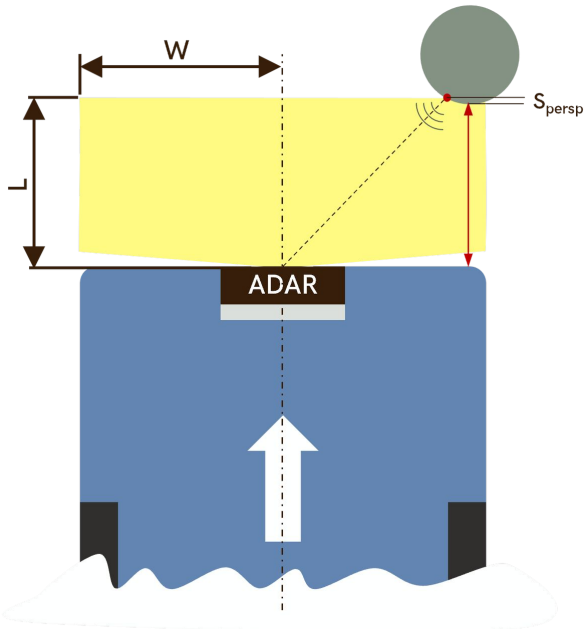

Figure 23: Perspective error mobile robot

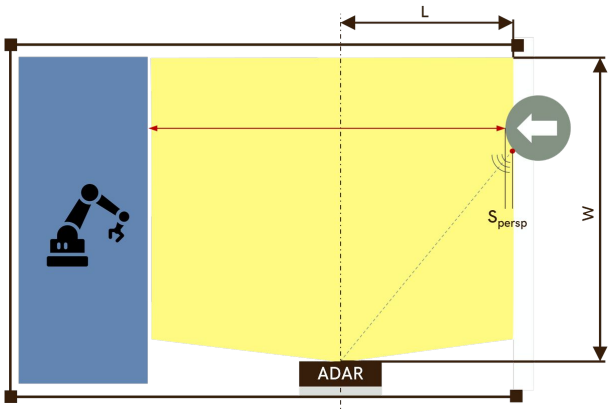

Figure 24: Example perspective error stationary machine

4.3.4.4. Safety supplements considering the perspective error on any other object than body parts

If the detection of hazardous objects is part of the safety function, perspective error supplements shall be considered depending on the geometry of the objects and the risk assessment.

4.4. Protective zone design for detection of persons in stationary applications

Danger

Incorrect positioning of ADAR or incorrect protective zone design may result in persons or body parts not being detected. The protective zone design shall be based on a risk assessment e.g. in accordance with ISO 12100:2010 and separation distances calculated in accordance with ISO 13855:2024.

ADAR has no knowledge of the machine state — it is the responsibility of the system designer to ensure the active zone is always appropriate for the current operating mode.

This section provides guidance on integrating ADAR and designing the protective zones so that the safety function is effective under all foreseeable circumstances. The installation location, sensor alignment, and design of the protective zones are highly dependent on the application and require thorough planning.

For stationary applications, ISO 13855:2024 provides comprehensive instructions applicable for multiple types of machinery, and shall be applied for the separation distance calculation

4.4.1. Possible types of applications

ADAR can be used for safeguarding of stationary machines in two different ways:

Presence of persons

Detection of "presence of persons" means that the protected zone covers almost the entire hazardous area. The safety-related part of the control system is therefore always capable of detecting people. It always has the information "person present" or "no person present."

An additional supplement to S may be required to prevent the hazard zone from being reached through with the limbs.

Access of persons

Detects whether a person crosses a "virtual fence." No information is available regarding the location of any person who may be present before or after this event.

4.4.2. Basic principles for protective zone design in stationary applications

The protective zone design shall account for human approach speed, overall system response time, and reaching distances, as defined in the following subsections, and the section 4's introduction.

Objective: Safeguards shall be configured and positioned such that access to the hazard zone to be safeguarded shall be detected in time to achieve the intended risk reduction (see ISO 13855:2024).

In order to achieve that protection objective at least the following key aspects must be taken into account, in addition to the overall system response time:

4.4.2.1. Human behavior, abilities, and proportions

Depending on the environment in which the machine/robot is used, assumptions must be made about human behavior, the possible proportions of endangered persons, and their mobility. ISO 13855:2024 for instance makes the following assumptions (non exhaustive list):

- Only persons aged 14 and older are present
- Persons do not approach the machine by running, jumping, or falling
- Persons do not climb over safety devices or use aids such as ladders around the machine

These and similar assumptions are regularly justifiable in industrial environments where only trained adult personnel are permitted access.
If the safety sensor for machines is used in other environments, corresponding justifiable assumptions must be taken from other standards or determined through individual assessments.

For example, ISO 13855:2024 derives a pedestrian speed of 1600 mm/s from these assumptions. This applies to trained, reasonably acting workers, but not, for example, to children running.

4.4.2.2. Separation distance

Since ADAR uses a volumetric detection zone, the plane that delimits the volume in the direction from which the person is approaching is decisive for the design of the separation distance. As the area is usually vertical, it is an orthogonal approach in the sense of ISO 13855:2024.

However, an additional supplement to S may be required to prevent the hazard zone from being reached through with the limbs - see 4. System design | Example application: Presence of a person in front of a robot.

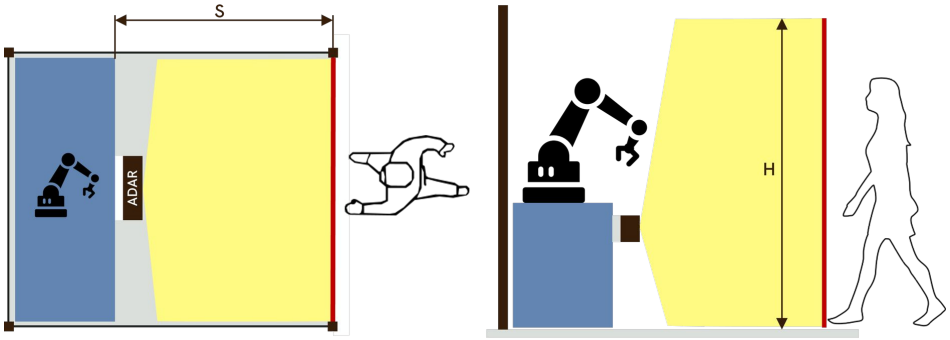

Figure 25: Separation distance

4.4.3. Example application: Presence of a person in front of a robot

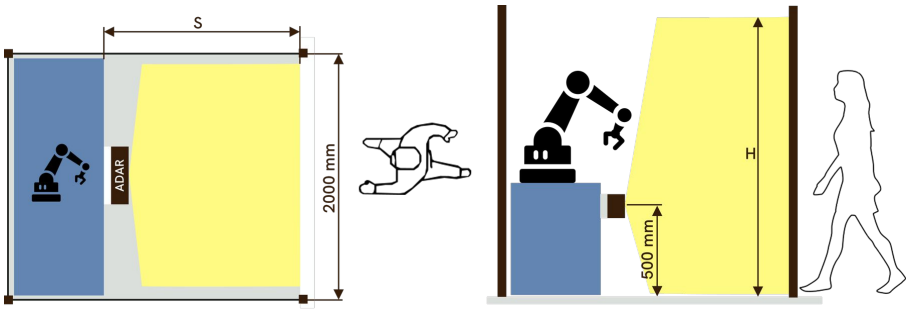

The final protection volume is exemplary determined as follows:

1. For stationary applications zone type 1 is selected, see section Zone heights and sensor positioning.
2. The upper edge of the hazard (reach of the robot arm) is 1800 mm. The upper edge of the front plane of the protective zone is therefore set at H=2000 mm. This means that overreach of the protective zone is impossible and does not need to be taken into account in the calculation, see ISO 13855:2024, clause 8.2.2, Table 2
3. But reaching through with an arm is possible; D_{DT} = 850mm must be added (see ISO 13855:2024, clause 8.2.2, Table 2)

$SD = K \times T_{total} + D_{Dt}$	**S_{nom} = 1600mm/s x 0,287s + 850mm = 1309mm**	
Whereby:		
SD = separation distance		
K = approach speed	1600 mm/s	*normative*
T_{total} = overall system response time	$T_{total} = T_{ADAR} + T_{safety\ PLC} + T_{robot}$ =112ms + 25ms + 150ms = 287ms	*exemplary*
D_{DT} = reaching through	D_{DT} = 850mm	*normative*
$SD_{nom} = SD + S_{persp}$	**SD = 1309mm + 48mm = 1357mm**	
SD_{nom} = separation distance nominal		
S_{persp} = supplement perspective error	= 1000mm / ((1309mm²) + (1000mm²))$^{0.5}$ x (640/15 + 35 mm) = 48mm	

We read $S_{ADAR,y}$ = 104mm from Safety supplement distribution (Figure 21)

Whereby:

Y = H - ADAR mounting height = 2000mm - 500mm = 1500mm

Z = SD_{nom} = 1357mm

It follows that:

Zone top = 1500 mm + 104 mm = 1604 mm

Zone bottom = -500mm

We read $S_{ADAR,z}$ = 99mm from Safety supplement distribution (Figure 21)

Whereby:

X = W/2 = 1000mm

Z = SD_{nom} = 1357mm

The protective zone polygon is finally defined as:

V_1(900/0); V_2(900/1456); V_3(-900/1456); V_4(-900/0)

By applying 4. System design | Minimum and maximum protective zone dimensions, it can be concluded that all vertices of the nominal protective zone are within the detection volume for limb detection.

4.5. Detection zone design for detection of persons in the path of a mobile robot

Danger

Incorrect positioning of ADAR or incorrect protective zone design may result in persons not being detected in the path of the mobile robot. The protective zone design shall comply with the applicable machine-specific standard. The worst-case stopping distance, including braking distance under all load and floor conditions, shall be used when designing protective zones.

Applicable standards include, but are not limited to:

- Driverless trucks: ISO 3691-4.
- Automatic floor treatment machines: IEC 63327.
- Personal care robots: ISO 13482.

4.5.1. Human behavior, abilities and dimensions

For example, the following boundary conditions can be assumed for the safety function "Person detection in the path" in accordance with ISO 3691-4:

> Standing persons and persons lying on the ground must be detected. It cannot be assumed that persons will deliberately run toward the robot or jump sideways into its path since the persons present are appropriately trained. Therefore, the person's own speed does not need to be taken into account. Only persons aged 14 or older are present, and no disabled persons or wheelchair users are expected.

Other boundary conditions must be applied, particularly for applications in non-industrial environments.

4.5.2. Basic principles for protective zone design

Summarized objective of ISO 3691-4:

The truck must have a safety system that can detect people in its path when it is driving automatically. The detection system must be designed so the robot stops before any rigid structure of it touches a person who is standing still in its path.

4.5.3. Zone switching

Protective zones that are too long hinder the maneuverability of mobile robots. Therefore, speed-dependent zone switching is often helpful. ADAR provides up to 128 presets for this purpose.

The safety controller is responsible for selecting the correct zone for the machine's current speed and direction — ADAR executes the selected zone without evaluating its suitability.

Danger

The zone preset shall be switched by a signal that corresponds to the required safety integrity level for the entire safety function - for example, a speed that has been detected by a safety encoder and processed by a safety PLC.

Uncertainties such as measurement errors in speed detection, errors caused by signal filters or hysteresis functions shall be taken into account.

To avoid unnecessary switching between protection zones, it is recommended to define switching thresholds slightly above the actual speed levels of the robot. Zone switching shall be implemented defensively — switch to a larger zone before accelerating or changing direction, not after.

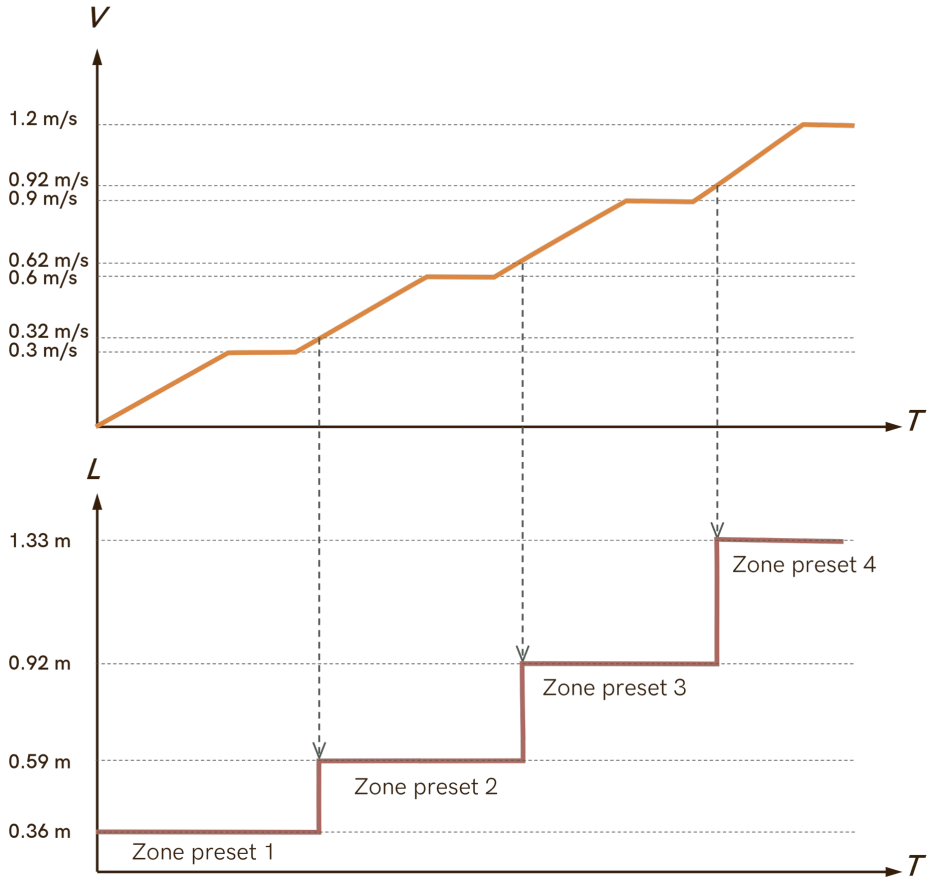

Figure 26: Switching thresholds

4.5.4. Supplement for protruding body parts

The detected body parts of zones type 1-3 are defined in section Zone heights and sensor positioning. The machine-specific risk assessment indicates whether there is a risk of injury e.g. to the toes, outstretched arms or other protruding body parts. Accordingly, allowances must be made for foot overhang,

overreaching, or underreaching. Helpful advice on this can be found, for example, in ISO 13855 and ISO 3691-1 (foot tip protection).

4.5.5. Example calculation - length of protection zone

The following example illustrates the principles for designing the protective zone for the safety function "Person detection in the path" in accordance with ISO 3691-4.

- The AGV is assumed to travel on a floor with numerous cracks and expansion joints → zone type 2 or 3.
- The AGV itself has a height of 1.5 m and a width of 0.8 m.
- ADAR is mounted on a height of 0.25m
- The AGV operates at four speed levels: 0.3 m/s, 0.6 m/s, 0.9 m/s, and 1.2 m/s. The switching points are set 0.02 m/s above each speed level.
- The corresponding braking distances were determined by testing. The maximum braking distance is 2.7 m.
- Accordingly, zone type 3 is selected, see section Zone heights and sensor positioning. The height of the zone is set to: 0.06m - 1.5m.
- In accordance with ISO 3691-1, a supplement of 80 mm must be added for the feet (intrusion allowance), since the lower edge of the monitoring zone is at 60 mm.

$SD = (V + V_{sw}) \times T_{total} + B$	**SD = (0.30 m/s + 0.02 m/s) x 0,287s + 0.36m = 0.45 m**	
Whereby:		
SD = separation distance		
V = set travelling speed levels	**0.3 m/s**; 0.6 m/s; 0.9 m/s; 1.2 m/s	*exemplary*
V_{SW} = switching treshold	0.02 m/s	
T_{total} = overall system response time	$T_{total} = T_{ADAR} + T_{safety\ PLC} + T_{robot}$ =112 ms + 25 ms + 150 ms = 287 ms	*exemplary*
B = braking distance	**0.36m**; 0.59m; 0.92m; 1.33m	*exemplary*
$S_{nom} = SD + D_{feet} + S_{persp}$	**S_{nom} = 0.45 m + 0.06m + 0.022 m = 0.53m**	
Whereby:		
D_{feet} = reaching over	60 mm	*normative*
S_{persp} = perspective error	$=400mm/((470mm)^2+(400mm)^2)^{0.5} \times (640/15 +35)$ = 22mm	*ADAR spec.*

Table 17: Example: length of protection zone mobile robot

Zone top = 1500 mm
Zone bottom = -250mm

We read $S_{ADAR,z}$ = 88mm and $S_{ADAR,x}$ = 68mm from Safety supplement distribution (Figure 21)

Whereby:

X = W/2 = 400mm

Z = SD_{nom} = 530mm

The protective zone polygon is finally defined as:

V_1(468/0); V_2(468/618); V_3(-468/618); V_4(-468/0)

By applying 4. System design | Minimum and maximum protective zone dimensions, it can be concluded that all vertices of the nominal protective zone are within the detection volume for limb detection.

4.6. Managing environmental conditions

Danger

Verify that the environmental conditions of the intended installation comply with the rated operating limits specified in the section 3.6. Environmental conditions before finalizing the system design. Detection capability is only guaranteed within these limits.

Additionally, certain environmental conditions affect detection capability and must be accounted for in the zone design — these are addressed in the following sections.

4.6.1. Indoor / outdoor use

ADAR is intended for indoor use. The detection capability is certified for indoor conditions only, including halls like warehouses and production facilities.

The sensor can be used close to open doors or gates as long as the operating conditions are within the specifications. Care shall be taken if there are strong winds or sprays of water entering through the doors or gates.

Very large buildings that have their own microclimate and where weather conditions affect the interior through very large openings—such as aircraft hangars—are not considered indoor spaces.

However, if the specified environmental conditions—such as the operating temperature and the requirements of ingress protection class IP64—are met, the device may be used outdoors under certain conditions. In this case, compliance with safety requirements must be demonstrated on a case-by-case basis, for example using the procedures outlined in the IEC 62998 series of standards.

4.6.2. Ambient temperature

Danger

Hazard due to wrong distance measurements.

To ensure that the measured distance is never greater than the actual distance to the detected objects, the lowest air temperature that can occur in the environment shall be configured specifically for the application.

ADAR measures the time it takes for a transmitted pulse of sound to travel to an object and back. The distance is calculated using the speed of sound. The speed of sound depends on the temperature of the medium through which the sound wave propagates. This means that the measured distance also depends on the temperature. Distance error as function of actual temperature for different input temperatures are illustrated below.

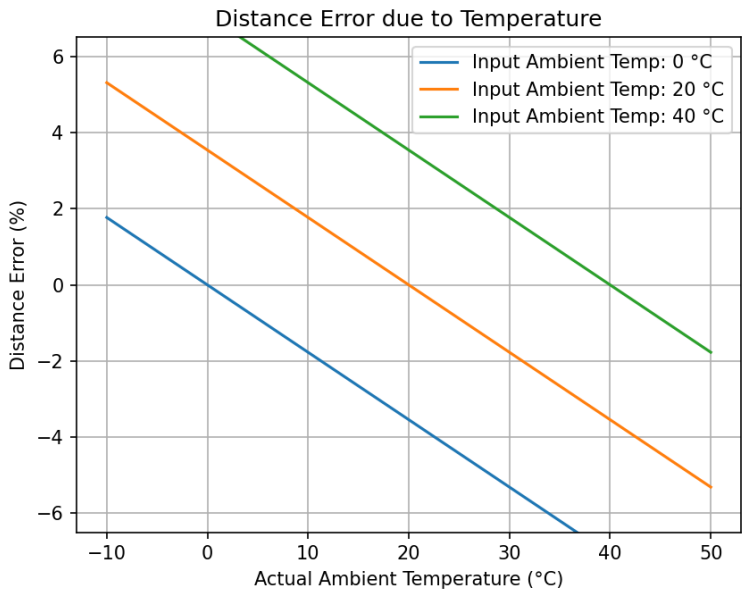

Figure 27: The distance error changes by approximately −2% of the measured range for every 10°C increase in temperature above the configured value.

Since the effect of the ambient temperature is critical to safety and not obvious to users, the impact must be clearly highlighted also in the operating instructions for the machine.

4.6.3. Temperature gradients affecting detection

Large temperature gradients can cause a shift in the measured direction of detected objects. If the detection volume of ADAR passes through regions that differ from the surroundings by more than 50 °C, written approval from the supplier is required before deployment.

Examples are:

- Furnaces
- Entrances to cold storage
- Hot machinery
- Exhaust outlets

4.6.4. Wind or air flow

Strong winds can affect the detection capability of ADAR. If ADAR is to be used in areas with strong airflows, such as those caused by industrial fans, written approval from the supplier is required before deployment.

> The suitability of the device for environments with strong winds shall be separately evaluated for the application.

4.6.5. Environmental pollution

ADAR can be used in environments with a maximum pollution degree 3 according to EN61010-1/ IEC 60664-1.

This corresponds to typical industrial indoor environments with moderate dust exposure, such as warehouses, assembly halls, machining production, automotive workshops, etc.

The following environments require written approval from the supplier before deployment:

- Areas with very fine or electrically conductive dust, such as dry milling of cast steel (carbon dust) or mining environments
- Areas where aggressive gases are present, such as tire manufacturing facilities

Regarding cleaning scheme see Cleaning instructions.

> ADAR is equipped with monitoring mechanisms designed to detect environmental conditions that could cause the safety function to fail, such as excessive dust accumulation, contamination of the sensor surface, or water droplets on it. When ADAR detects such conditions, it enters safe state.

4.6.6. Acoustic sources

If loud acoustic sources that overlap with ADAR's frequency spectrum are present in the installation environment, ADAR detects the interference condition and transitions to the safe state within the response time. While in this condition, false detections may appear in the point cloud output.

Notice

Frequent nuisance trips caused by environmental conditions may lead operators to bypass or disable the safety device. The machine design shall minimize the likelihood of nuisance trips by ensuring the installation environment complies with the conditions described in this section. If nuisance trips occur in service, the environmental cause shall be investigated and resolved before returning the machine to operation; see Regular maintenance.

4.7. Sensor-to-sensor interference

4.7.1. Installations without interference

If the distance between ADARs is at least 10 m no interference is to be expected. When interference occurs, ADAR enters the safe state within the response time.

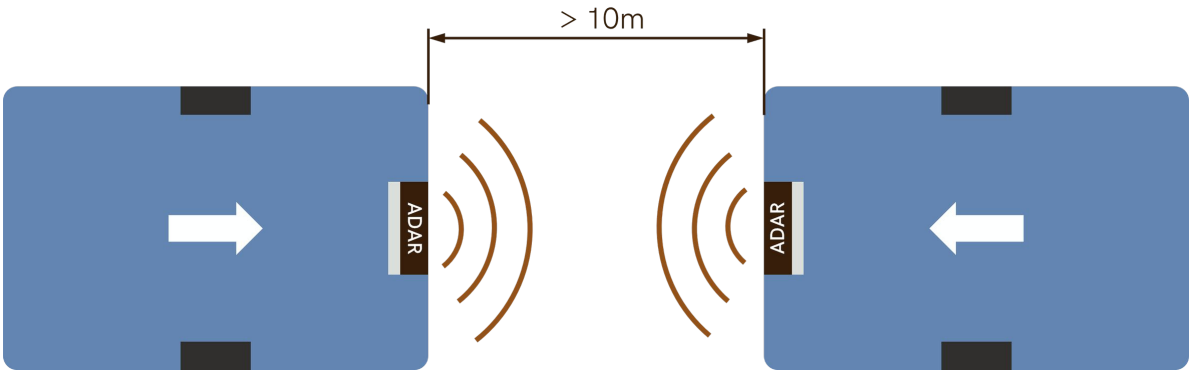

Figure 28: Sensor-to-sensor interference — minimum separation distance

If two sensors are facing in opposite direction, no interference is to be expected.

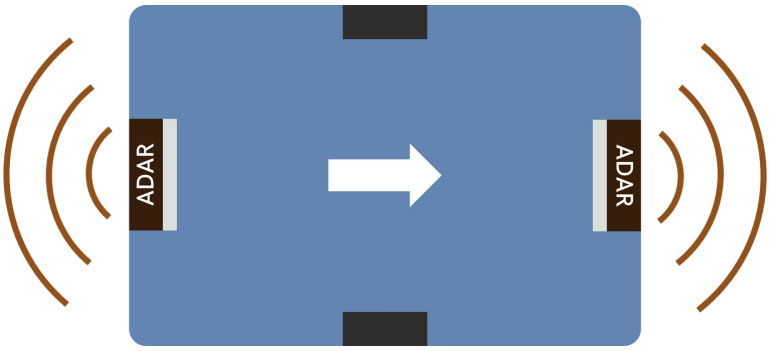

Figure 29: Sensor-to-sensor interference — opposite orientation

4.7.2. Installations requiring coexistence measures

If more than one ADAR shall operate closer than 10 m, measures need to be taken in order to avoid nuisance trips. See 6.4.3.3. Device coexistence for guidance.

4.8. Mechanical integration

4.8.1. Mounting clearance

To optimize field of view (FoV), it is recommended to flush mount the device into a larger surface (baffle), within a tolerance of ±0.3 mm. Additional edges or surfaces should be kept outside the hemispherical field of view.

In general it is recommended to ensure that no hardware, static objects, or environmental barriers should be present in the vicinity of the device within the hemispherical field of view, as these degrade performance.

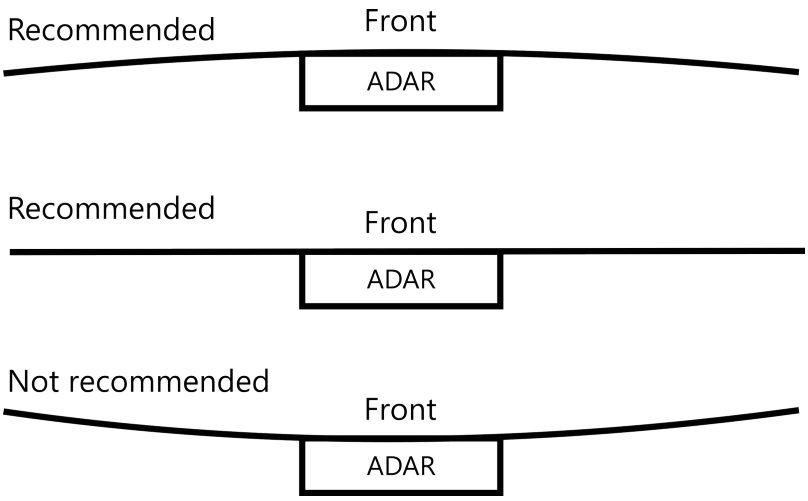

Figure 30: Recommended surface shapes

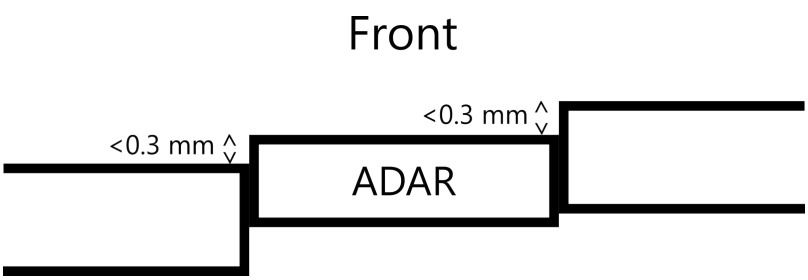

Figure 31: Recommended flush mounting tolerances

4.9. Integration in the control system

4.9.1. Power supply

Danger

ADAR must be supplied by a PELV or SELV source according to IEC 60204-1. A non-PELV/SELV supply does not guarantee isolation from mains voltage and may, in a fault condition, expose accessible conductors to hazardous voltage.

Notice

The supply voltage shall remain within 18 V to 28 V DC. Protect the supply cable with a fuse or electronic current limiter rated at 1–1.5 A. Supply outside these limits or without overcurrent protection may damage the device.

4.9.2. EMC

- Metal chassis and cable shields shall be connected to the machine mainframe or functional earth (FE).
- Use shielded cables with a max. length of 10m.
- Note: Metal chassis and cable shields are connected to 0V inside ADAR.

4.9.3. OSSD outputs

Danger

Each OSSD channel shall be connected to a separate safety-rated input on the safety controller. Both channels shall be monitored using 1-out-of-2 (1oo2) logic. Connecting both channels to the same input or failing to monitor both channels eliminates the redundancy of the safety output and reduces the safety integrity of the system.

OSSD0 and OSSD1 are independent redundant output signals that indicate whether an object is present in the protective zone.

The OSSD outputs regularly send test pulses to detect short circuits or wiring faults. The safety controller must tolerate these pulses without triggering an unintended safe state transition. For test pulse width and frequency see OSSD characteristics (Table 12).

ADAR re-energizes automatically when the protective zone is clear, see 2. Product description, Operation | Safe state, safe output and fault reaction. Where the risk assessment requires manual reset before restart, a restart interlock needs to be implemented in the safety control system.

4.9.4. Warning outputs

INNER WARNING and OUTER WARNING are output signals, indicating presence of an object inside the inner/outer warning zone. The signals should be connected to PLC inputs.

Notice

Warning outputs shall not be used to implement or substitute the safety function.

WARNING signal ON (high) means object is detected (which is opposite of the OSSD behavior).

4.9.5. Zone switching by zone select inputs

Danger

Zone select input signals shall achieve a Performance Level equal to that of the associated safety function at system level.

Zone select signals are connected to a safety PLC or other safety controller outputs. The signals form a bit array that controls which zone preset is active.

Zone presets can be selected at runtime via the digital I/O using one of two coding schemes:

Double inverted (5 bits for zone selection + 5 bits redundancy) — supports up to 32 protective zones. Remaining bits can be hard-wired to HIGH or LOW according to the coding table in Appendix B. Zone select bit 10 is unused in this scheme and may be connected to 0 V or left floating.

CRC (7 bits for zone selection + 4 bits checksum) — supports up to 128 protective zones. The checksum is CRC-4-ITU (ITU G.704).

Find the full coding in Appendix B.

Danger

When CRC coding is used, zone preset ID 0 shall not be used, because a complete cable break in this state produces a valid-looking bit pattern and would go undetected.

The zone switching logic in the safety controller shall respect the following timing constraints:

- if one zone switching event takes (until all inputs have changed state and the bit pattern is plausible) more than 5 ms, ADAR transitions to the safe state, reducing availability of the machine.

- the time between zone switches should be more than one response time. If two valid zone switching events occur within one response time, ADAR may transition to the safe state, reducing availability of the machine.
- after valid zone switching event, the new protective zone is applied within response time

4.9.6. Example wiring schematic

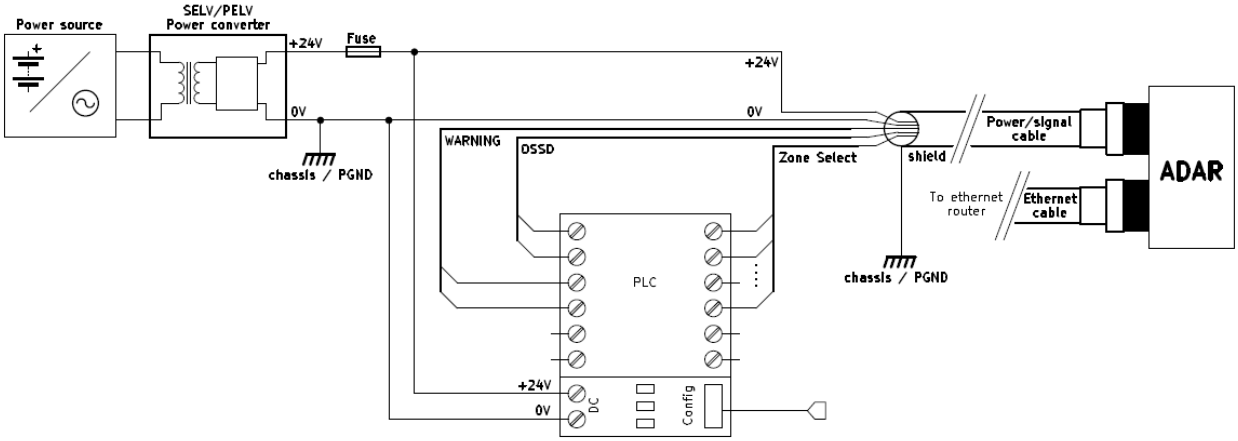

Figure 32: ADAR wiring overview

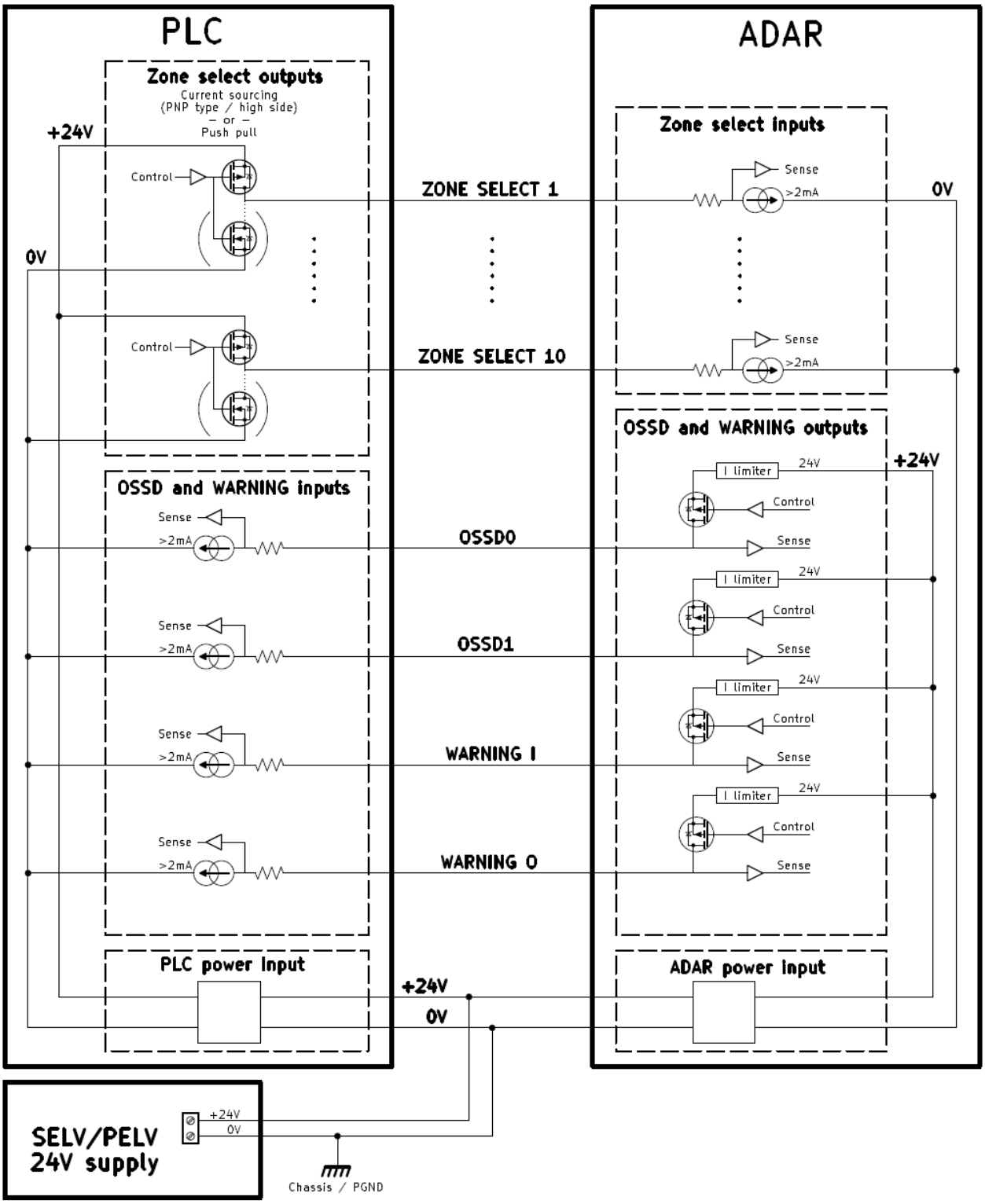

Figure 33: I/O signal detail

4.10. Cybersecurity

This section addresses cybersecurity aspects of the protective device that may affect the integrity, configuration, or correct behavior of the safety function. General cybersecurity management and system-level security measures are outside the scope of this manual.

4.10.1. Security responsibilities

When the protective device is integrated into a larger machine or system, security responsibilities are allocated as follows:

- The ADAR supplier is responsible for the security of the protective device itself, as delivered and updated in accordance with the instructions provided,
- Responsibility for the security of the overall system into which ADAR is integrated lies with the user organization.

The user shall ensure that:

- access to the protective device and its interfaces is restricted to authorized personnel - enforced by access protection measures implemented in ADAR,
- security-related updates, advisories, or notices provided by the ADAR supplier are evaluated and applied.

In case of security related events, contact the supplier. See Contact details and return.

4.10.2. Security measures implemented in the protective device

The protective device is designed and manufactured in accordance with security requirements. Security-related measures implemented in the protective device include:

- secure boot mechanisms,
- authenticated and integrity-protected firmware updates,
- protection against unauthorized modification of firmware,
- controlled access to configuration functions.

Access to ADAR is possible only via communication interfaces and zone select input. Access via communication interfaces to safety-related configuration parameters requires authentication and is restricted to defined operating states.

5. Mechanical and electrical installation

5.1. Mechanical installation

Danger

Incorrect positioning or inadequate fastening of ADAR will reduce detection reliability and may result in persons not being detected. ADAR shall be installed in the position and orientation specified by the system designer. The mounting requirements below shall be followed to ensure correct and stable positioning throughout the operational lifetime of the machine.

ADAR must be positioned with consideration to its field of view and configured monitoring zones according to the specifications of the responsible system designer. Particularly the angular accuracy has a significant impact onto the effectiveness of the monitoring zones. Take care especially in case of replacement of a defect sensor.

ADAR must be screwed on, taking the following points into account, to ensure correct positioning in the long term:

- Use always all 4 mounting holes.
- The screws must protrude at least 8 mm and no more than 20 mm into the internal thread of the housing.
- Use mounting torque 3 ± 0.3 Nm on all four M4 mounting holes.
- If vibration affects the device, consider additional effective measures for securing screws, such as the use of locking compound.

The surface with the connectors is the heat sink of the device. Ensure good thermal contact by using the mounting brackets specified by the machine designer and ensure a flat contact.

5.2. Electrical installation

Danger

Hazard of unwanted actions by the machine while commissioning

- De-energize the entire machine.
- Inspect the device for visible damage. Do not install a device that shows signs of physical damage.
- Complete the mechanical installation.
- Verify pinout and terminal assignments before applying voltage.
- Ensure proper strain relief and avoid routing near high-voltage lines.
- Test all wiring with continuity check before commissioning.

5.2.1. Tightness

To ensure the specified IP protection class following shall be taken into account:

- The cables must fulfil IP 64 or higher.
- Unused M12 connectors must be fitted with a suitable, sealed blind plug.
- The cap nuts on the M12 connectors must be tightened according to the cable manufacturer's specifications for the cable. Usually ~0.7 Nm.

5.2.2. Power supply and I/O requirements

1. The power supply requirements and the requirements for the I/O can be found in section 3.7. Electrical data.
2. Unconnected inputs are interpreted as logic LOW.

5.2.3. Cable requirements

- Ethernet cable connector: M12 D-code 4 pin male
- Power/IO cable connector: M12 A-code 17 pin female
- Straight and angled cable connectors are supported

Electrical installation of ADAR shall be according to requirements and constraints in section 3.7. Electrical data. In addition, note the cable constraints in the table below.

Installation of cable	Constraint
Cable ratings	Shielded cable of length max 10 m Continuous current I_Z>=1.5 A Ohmic loss < 1.5Ohm Insulation withstand 500 VAC for 5 minutes
Overcurrent protection of cable	To prevent fire or excessive heat generation from a short circuit in the power cable, a current limiting device shall be provided in connection with the power supply. A fuse with current rating 1-1.5A is adequate. As alternative to a fuse, an electronic current limiter can also be used.

Table 18: Cable installation constraints

Examples of supported cables:

Manufacturer and part number	Description
Phoenix Contact SAC-17P- 3,0-35T/FS SH SCO / 1430297	Circular M12 17pin A-code female. Free cable end. 3.0m shielded cable.
Same Sky CDM1275-04D-01MST-3M-RJ45-67	Circular M12 4pin D-code male to RJ45. 3.0m shielded cable.

5.2.3.1. Mechanical fixation

It is recommended to securely fasten cables at a maximum distance of 150 mm from the device to prevent damage to the connectors caused by vibration.

5.2.4. Pinout description

Device connectors:

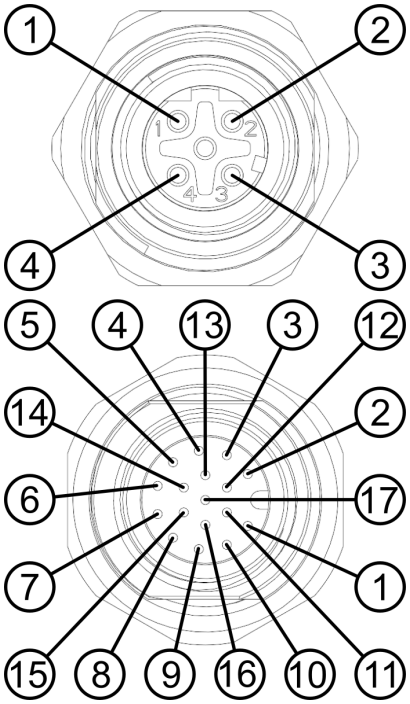

5.2.4.1. Ethernet 100Mb

M12 D-coded 4-pin **female** connector

Pin	Designation	Function
1	TX+	Send data +
2	RX+	Receive data +
3	TX-	Send data -
4	RX-	Receive data -
Thread	SH	Shielding

5.2.4.2. I/O and power

M12 A-coded 17-pin **male** connector

Pin	Designation	Function
1	PWR_IN	Supply voltage +24 V DC
2	PWR_RET	Supply voltage 0 V DC
3	OSSD0	OSSD0 output

Pin	Designation	Function
4	OSSD1	OSSD1 output
5	ZONE_SELECT0	Safe input bit 0
6	ZONE_SELECT1	Safe input bit 1
7	ZONE_SELECT2	Safe input bit 2
8	ZONE_SELECT3	Safe input bit 3
9	ZONE_SELECT4	Safe input bit 4
10	ZONE_SELECT5	Safe input bit 5
11	ZONE_SELECT6	Safe input bit 6
12	ZONE_SELECT7	Safe input bit 7
13	ZONE_SELECT8	Safe input bit 8
14	ZONE_SELECT9	Safe input bit 9
15	INNER_WARNING	Inner warning zone output
16	OUTER_WARNING	Outer warning zone output
17	ZONE_SELECT10	Safe input bit 10
Thread	SHIELD	Shielding

6. Configuration and commissioning

6.1. Factory reset procedure

> Performing a factory reset will erase all network and device configuration settings, restoring the unit to its default state.

A factory reset is needed if you have a device in front of you

- with unknown password
- with unknown network configuration.

To do the factory reset:

1. Supply power to the device
2. Locate the reset button
   The factory reset button is concealed beneath the yellow sticker on the device. Below the sticker there is a Ø1 mm access hole, as shown in the image below.

Figure 34: Location of reset button access hole

2. Access the button
   The reset button is positioned approximately 10 mm inside this hole.
3. Activate the reset

- Use a pin or similar pointed object to reach the button through the hole.
- Press and hold the button for 5 seconds.
- You will feel tactile feedback when the button is depressed.

A successful factory reset is indicated by alternating LED blinking pattern for about 4 seconds.

4. Re-attach or replace the sticker after having performed the reset. Ensure that the sticker adheres well and evenly. Use a replacement sticker if necessary.

6.2. ADAR Designer

ADAR Designer is a software tool (for Windows and Linux) developed by Sonair specifically for configuration of ADAR devices.

How to use ADAR Designer is described in a separate document “ADAR Designer User manual” (SDN161).

ADAR Designer connects to the device over Ethernet using the CoAP over UDP protocol. Once connected to the device, ADAR Designer displays the hardware version, firmware version, and configuration info (including configuration checksum) on the device overview screen.

The tool provides a graphical user interface for:

- Preparing configurations
  - Manage zone presets for dynamic selection
  - Edit protective and warning zones
  - Edit exclusion zones
  - Adjust signal processing behavior
- Device management
  - Upload/download device configuration
  - Configure network settings
  - Monitor device state

6.2.1. Installation

The latest version of ADAR Designer can be downloaded from Resources[2].

Download from Github

Operating system	Installer name
Windows*	`ADAR.Designer_<version number>_x64-setup.exe`
Debian based Linux distributions* (e.g. Ubuntu)	`ADAR.Designer_<version number>_amd64.deb`

2. https://www.sonair.com/resources

* Only recent versions supported

Windows

Execute the installer and follow the instructions

Linux

Open the terminal, navigate to the folder containing the installer. Run the following command (replace <installer name> with the specific name of the downloaded installer):

```
sudo dpkg -i <installer name>
```

Follow the instructions in the terminal.

When the installation is complete, you can type `adar-designer` to start the program or start it from the GUI.

6.3. Connect to device

To configure ADAR, an Ethernet connection must be established between the computer and ADAR. Please note the following default network settings.

Network config	Default value
Network config flags	Static IP enabled
Static IP address	10.20.30.40
Subnet mask	255.0.0.0
Gateway	10.20.30.1

Table 19: Network settings

Uploading an unintended or incorrect network configuration might make it difficult to reconnect to the device, so make sure everything is correct before pressing “Upload new network configuration”. If an invalid configuration is accidentally uploaded, and all attempts at communication fails, it may be necessary to perform a factory reset to re-establish communication.

6.4. Configuration

6.4.1. Global settings

Global settings can be considered the "default" settings for a device, meaning that everything configured in the global context will take effect in all zone presets that do not explicitly apply an override.

Global settings expose parameters that affect the signal processing done by the device. Many of the parameters are provided for fine-tuning specific trade-offs, like sensitivity and device interoperability, and can therefore be overwritten by individual zone presets. See section user configurable settings for detailed description of all parameters.

It is possible to specify *up to four* exclusion zones in the global settings. Contrary to the other global settings, global exclusion zones cannot be overridden by the active zone preset. They always apply, no matter which zone preset is active.

There is one global exclusion zone that is always present in a configuration. The "floor detection exclusion zone" is an automatically calculated exclusion zone that is meant to ignore detections from the floor directly below the sensor. It is dynamically linked to the "distance to floor" parameter.

The user can specify up to three additional global exclusion zones. These are intended for ignoring specific physical features that are always present in the field of view of the device. On an AMR this can be some part of the robot itself that extends into the field of view of the device causing nuisance trips. In an industrial setting, it can be features such as a stationary pole, wall or piece of machinery that is to be ignored by the device. See the section about exclusion zones for more details.

> When monitoring the **point cloud** provided by the device over Ethernet, points that are inside an exclusion zone will still be visible so they can be used for feature indexing. Instead of being removed, the relevant points are *flagged* so that they can be ignored externally. The status of the **OSSD output** will ignore detections that are inside an exclusion zone.

6.4.2. Zone presets

For dynamic scenarios, it is possible to configure up to 128 zone presets that can be activated through the ZONE_SELECT inputs while the device is performing the safety function. See the section on zone switching by zone select inputs for more info.

The main functionality of a zone preset is to define a set of up to three 3D zone geometries to be monitored for intrusion, see the section on protective, warning and exclusion zone settings. However, it is also possible to override a selection of the global settings on a preset-to-preset basis. This allows for use cases where the device can be configured to adapt its behavior based on dynamic zone selection inputs.

A zone preset includes:

- One protective zone
- Zero or more (max 2) warning zones
- Zero or more (max 6) exclusion zones
- Zero or more parameter overrides

Each preset must have a unique ID, which is shared with the controller. The controller can then select a zone preset by activating the ZONE_SELECT pins in correspondence with the configured safe input encoding.

Selecting a zone preset means that the device will be re-configured with the settings stored in the given preset. Zone presets can therefore be used to switch between different protective zones, warning zones, exclusion zones and parameter overrides - to accommodate for a large variety of applications and scenarios.

6.4.3. User configurable settings

This section lists and describes all user configurable device settings, their default values, and safety impact.

6.4.3.1. Environmental conditions

6.4.3.1.1. Distance to floor

Danger

A wrong distance to floor value will cause objects below the configured height to be ignored by the device, which may result in persons or objects going undetected. It will also cause the floor suppression exclusion zone to be incorrectly positioned, which may result in objects near the floor going undetected or the floor generating false detections.

- Set the distance to floor value to the actual mounting height of the device.

Summary

The physical mounting height of the device, measured from the device origin.

Default value	`4 m`
Valid range	`0.1 m to 4 m`

Description

All detections below the configured distance to floor will be ignored by the device.

When the device is mounted so that the front is perpendicular to the floor (e.g. on an AMR - facing in the direction of travel), reflections from the floor will appear inside most protective zone geometries. These reflections are therefore ignored with an exclusion zone that starts at a range dynamically linked to the distance to floor value. Similarly, the **floor suppression filter** depends on the distance to floor value.

When the device is mounted in an orientation where reflections from the floor are not expected to be present, this value can be set to the maximum detection distance (5 m) to essentially disable floor related features.

6.4.3.1.2. Ambient temperature

Danger

A wrong temperature leads to incorrect distance measurements. A hazardous object may be detected too late.

If the ambient temperature is expected to vary, the lowest expected temperature shall be configured. This biases the error toward the safe side—i.e., objects will be measured as being closer than they actually are.

Summary

The expected environment temperature within the FoV.

Default value	`20 °C`
Recommended range	`0 °C to +50 °C`

Description

ADAR measures the time it takes for a transmitted pulse to travel to an object and back. The distance is calculated using the speed of sound. The speed of sound depends on the ambient temperature.

6.4.3.2. Hardware interconnect

6.4.3.2.1. Safe input encoding

Danger

If the selected coding does not match the coding used by the controller, the wrong zone preset may be selected.

Summary

Determines how the device should decode safe inputs to zone ID.

Default value	`CRC`
Available values	`CRC or Double Inverted`

Description

This option allows the user to choose between more redundancy or more zone presets. The CRC option contains a valid encoding for all-zero input (i.e. all ZONE_SELECT pins unconnected) and is therefore configured as the default value. If the Double Inverted option is selected, but no ZONE_SELECT inputs have been connected, the device will throw an error with code `0x2` (invalid zone select encoding). See Error

codes for more information. See the encoding tables in Appendix B for a full description of the different options and valid encoding values.

6.4.3.3. Device coexistence

When ADAR is deployed in applications where multiple robots operate within each other's range, it is recommended to implement measures to ensure reliable coexistence. ADAR can detect potential interference from other units, and users can adjust the system's response using the configuration options described below.

By default, if no coexistence measures are configured, ADAR may experience interference from nearby devices. This can lead to false detections and unintended system responses. To minimize such risks, users should enable and fine-tune the available interference management settings according to their specific application.

Two strategies for handling interference between multiple ADARs are elaborated in the subsections below. For ADARs mounted on the same machine, coexistence is managed through time synchronization. ADARs mounted on different machines require different transmit codes for effective coexistence.

6.4.3.3.1. Transmission code

Danger

Transmission codes can be changed over CoAP while the safety function is active and without authentication. An unintended or unauthorized change may extend the response time without the change being noticed.

1. Use the slowest applicable response time when calculating the overall system response time.
2. If the application relies on the shortest response time, verify that transmission code 0 is configured and use the "Lock transmission code" option to deny changes over CoAP.

Summary

An index representing a specific ultrasound signature.

Default value	`0`
Recommended code pair	`0 and 2`

Description

In order to avoid interference between ADARs with overlapping field of view, different transmission codes can be assigned to each device. There are four available codes (0, 1, 2, 3), and compatible pairs can be found in the figure below.

The transmission codes run on different frame rates, according to the table below. Therefore, the response time of the *slowest code that is used in the application* should be considered when defining zone geometries.

Code	Frame rate
0	18 Hz

Code	Frame rate
1	16 Hz
2	14 Hz
3	13 Hz

Table 20: Frame rates per transmission code

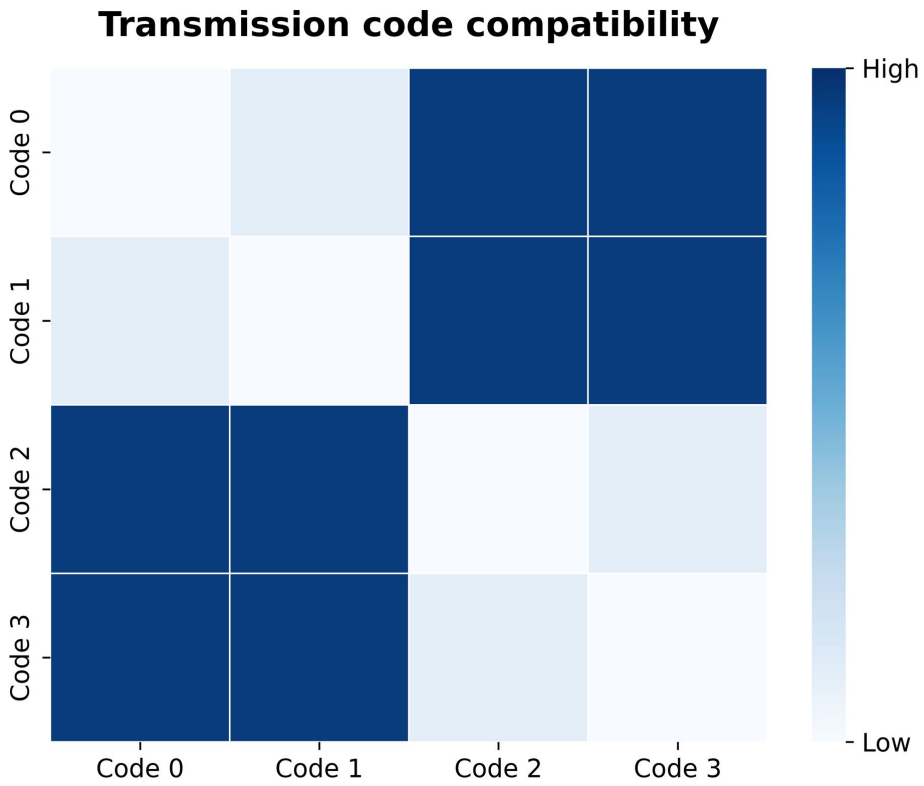

6.4.3.3.2. Max coexistence retries

Notice

The selected coexistence retries affect the response time. If the response time is too long, detection may occur too late. Verify that the configured value is consistent with the system design response time requirement using the table in section 3.4 (Table 7). Confirm the response time in the configuration verification report before activating the configuration.

Summary

The number of consecutive frames where the device will ignore interference from other devices.

Default value	`0`
Recommended value	`1`

Description

Ultrasound from other ADAR devices can be identified as interference and filtered out. This interference may, however, mask reflections from true objects near the interfering device. Max coexistence retries determines how many retransmissions are performed to rule out if there is interference while still retaining true reflections from real objects.

Increasing max coexistence retries may reduce false positives (nuisance trips) from *intermittent interference* but will increase the maximum response time. Therefore, zone geometries must be adjusted when raising this value to account for the new response time.

If set to 0, which is the default, all features that improve device coexistence are disabled.

> The response time increases with 1/frame rate for each retry.

6.4.3.3.3. Synchronization offset

> This parameter does not take effect unless *time synchronization* is enabled in the device's “Network configuration” (disabled by default).
>
> In ADAR Designer, synchronization offset is set through “Configurator->Global device settings->Device coexistence” but will only take effect if the device is configured with time synchronization in “Overview->Connected sensor->Network Configuration->Enable time synchronization”

Summary

A timing offset in percent of the frame period. Used to reduce interference between devices.

Default value	`0 %`
Recommended value	`0 or 50 %`

Description

The synchronization offset allows ultrasound transmissions from different devices to be distributed into different time slots - reducing interference between devices. One of the devices must be designated as “Synchronization server”. The other(s) can either listen for *any* synchronization server, or listen to a *specific* one. This feature requires ADARs to be on the same network (and subnet).

To minimize cross-talk when several ADARs are permanently mounted in each other´s vicinity (e.g. on the same AMR), units with overlapping field of view should be configured with different time offsets. Units that face in opposite directions do not need to have an offset relative to each other. To maximize the time difference for two units using the same transmission code, the time offset should be set to `50 %` (i.e. `1 /`

`(2 * Frame rate)` µs). As an example, with a frame rate of 16 Hz, a time synchronization offset of 50 % corresponds to `1 / (2 * 16 Hz) = 31 250 µs`. See Transmission code for info about frame rates.

6.4.3.4. Performance

6.4.3.4.1. Suppress floor detections

Summary

For points close to the floor (from 0 to 5cm above the floor) the minimum strength for positive detection is raised, this floor-strength can be scaled with the scaling factor.

Default value	`1.0`
Available range	`0.0 to 2.0`

Description

Small objects on the floor, like tape, can cause relatively strong reflections that lead to unwanted detections in the protective zone. Rough floor surfaces, like asphalt or tile joints, can have the same effect.

Increasing the scaling factor will suppress detections near the floor by requiring a stronger signal strength to classify as a detection. This scaling does not affect the detection capability.

6.4.3.4.2. Hysteresis

Notice

The selected hysteresis affects the response time. If the response time is too long, detection may occur too late. Verify that the configured value is consistent with the system design response time requirement using the table in section 3.4 (Table 7). Confirm the response time in the configuration verification report before activating the configuration.

Summary

When hysteresis is set, the device requires multiple positive samples to register a valid detection.

Default value	`0`
Recommended value	`0`
Max allowed	`4`

Description

This value controls the number of consecutive frames an object needs to be detected inside the protective zone before the OSSD signal is set to OFF.

By increasing the hysteresis, the device will encounter fewer intermittent detections from weak reflectors but the overall response time of the system will increase. Therefore, when **hysteresis** is increased, zone geometries must be modified to account for the new response time.

Using this option is generally discouraged, as unwanted detections can often be mitigated by adjusting zone geometries, device mounting direction or other parameters with less overall impact on system performance.

The response time increases with 1/frame rate for each retry.

6.4.4. Protective, warning and exclusion zone settings

To ensure the device's primary function, there must be no obstacles between the device and the **protective zone**. Therefore, zones are not permitted to be **disconnected from the sensor**.

6.4.4.1. Zone shape constraints

The protective and warning zone shapes are limited to polygons in the x-z plane, which are extruded upwards and downwards. Application specific constraints are described in section 4.

6.4.4.2. Protective zone

A protective zone is a defined volume within the ADAR's field of view (FoV). The active protective zone is monitored for detections. The state of the OSSD output reflects if there are detections in the zone.

A protective zone must be well-formed:
Any straight line from the device origin to a point inside the protective zone must remain entirely within the zone. This restricts how much the zone can "bend" or deviate laterally.

6.4.4.3. Warning zone

See the definition of protective zones. The difference between warning zones and protective zones is that warning zones do not control any safe output signals.

6.4.4.4. Exclusion zones

Danger

An incorrectly configured exclusion zone may mask out detections from real targets. Exclusion zones shall be verified to ensure no zone requiring protection is masked.

Exclusion zones define volumes to be ignored by the system, typically to avoid unnecessary stops (e.g., due to the floor or objects that are in a fixed location within the device's field of view).

Unlike protective zones, exclusion zones may be disconnected from the device origin:
An imaginary line from the device origin may enter an exclusion zone, but must not exit it again.

Exclusion zones are common across all protective and warning zones within a given zone preset.

6.4.5. Zone preset ID

Danger

A preset with a protection zone that does not fit to the machine's actual state could be activated by the safety controller when:

- The preset ID does not fit to the intended zone configuration
- Too few presets are defined and correctly configured

When editing a configuration, the user is free to reassign the zone preset ID of any zone preset. See ADAR Designer user manual SDN161 for more information.

6.5. Commissioning

Danger

Hazard of severe injuries or death due to unintended machine movements.

During commissioning, the machine may make unintended and potentially dangerous movements.

- Make sure the machine is in a safe position - for example, ensure that a mobile machine cannot move.
- Make sure no one is in the hazardous zone.

Correct workflow:

1. Mount and install the device according to section 5. Mechanical and electrical installation.
2. Make sure the machine cannot harm any person during the validation process.
3. Power up the machine.
4. Upload the configuration that belongs to the machine using ADAR Designer. See ADAR Designer user manual SDN161 for instructions.
5. Verify the configuration, see section 7. Verification and validation for instructions.
6. Perform a functional validation test after installation, see section 7. Verification and validation.

7. Verification and validation

Verification and validation are the final steps before the safety function may be relied upon. The two activities serve different objectives:

Verification confirms that the configuration in the device matches the design: the configuration report returned by ADAR is reviewed against the design input before the configuration is activated.

Validation confirms that the installed safety function is effective on the actual machine: the protective zones, the zone switching, and the integration into the control system are tested using a test object (section 7.2.3).

Both activities shall be completed before the machine is put into service.

ADAR's detection capability and safety function are verified and validated as part of the development of the device, and confirmed by independent functional safety assessment and EC type-examination. These device properties do not need to be retested. The activities in this chapter therefore concern the specific integration: the protective zone configuration, the zone switching, and the connection to the machine control system.

7.1. Verification of configuration

Danger

An unverified configuration may contain errors that result in incorrect zone geometries or response times. Verification of the configuration shall be performed before activating any new or modified configuration.

The verification of a configuration is performed by applying the designed configuration, including a checksum, to the device. The firmware verifies the configuration through range and consistency checks to ensure compliance with predefined rules before the configuration is accepted and returned to the user together with the configurations checksum identification.

It is the responsibility of the user to review the returned configuration report and verify that

- The zone presets and the configuration parameters are as designed, by comparing the returned configuration with the design input.
- The ADAR response time is suited for the application, by applying the formula referenced in section 3.4 Response time on the returned configuration's values for the response time related parameters.
- If the application relies on the shortest response time, verify that transmission code 0 is configured and ensure it does not change.

Do this review before activating the new configuration with the checksum.

7.1.1. Re-verification after modification

After making changes to the configuration, verification must be performed in accordance with Section 7.1.

7.2. Validation of the safety function

Danger

An unvalidated safety function installation cannot be relied upon to protect persons from hazardous machine motion. Validation of the safety function shall be performed before the machine is put into service and after any modification affecting the safety function.

It is the responsibility of the user to validate that the active configuration is compliant with the system requirements of the specific machine integration. During validation, ensure that a hazardous situation remains controlled.

The safety function shall be tested independently, so no other functions with different performance levels influence the results of the test (e.g. warning zones that slow down the mobile machine before the safety function is activated).

7.2.1. Validation of protective zone integration to machine control system

The objectives are to

- Validate that the safety controller and the ADAR protective zones match.
- Validate that ADAR is correctly installed relative to the hazard.

Test preparation

- ADAR installed to machine according to this User manual.
- Other functions which influence the test shall be disabled.
- Means of applying each protective zone through the control system.
- Access to control system zone ID mapping to ADAR configured protective zone ID.
- Access to the configuration report with the same checksum as the ADAR configuration.
- Means of observing the safety function output (the OSSD from ADAR or a downstream signal).
- Representative test object and means of positioning the test object - for example ADAR specific test object

Test procedure

- For all configured protective zones
    - Check what boundary of the configured protective zone is expected by inspection of the zone mapping of the safety controller and ADAR's configuration report.
    - Apply the protective zone through the control system
    - Validate that the applied protective zone is correctly defined by checking that the safety function is activated at or before the test object crosses the nominal boundary of the protective zone

7.2.2. Validation of protective zone switching in machine control system

The objective is to

- Validate that dynamic switching between protective zones does not result in a hazardous condition due to delayed or incorrect switching.

Test preparation

- Installed ADAR according to this User manual.
- Other functions which may influence the test shall be disabled.
- Access to the machine risk assessment - in particular the maximum speed of the machine, the hazard speed (for example: walking pace of a human), and the directions of movement of the machine.
- Define from the risk assessment a set of scenarios (machine motion trajectory, hazardous object placement). In particular acceleration and turning scenarios shall be defined.
- Means of providing relative movement between a test piece and the machine, so the risk assessment is covered.
- Prepare the test object, see section 7.2.3 ADAR specific test object.

Test procedure

- For all scenarios derived from the hazard analysis
    - Let the mobile machine approach a test object along the defined trajectory.
    - Validate that the machine stops before it touches the test object.

7.2.3. ADAR specific test object

ADAR's detection capability has been validated for defined objects as part of the EC-type examination. The ADAR-specific test object is used exclusively to trigger repeatable detections in order to validate that the protective zone design is appropriate.

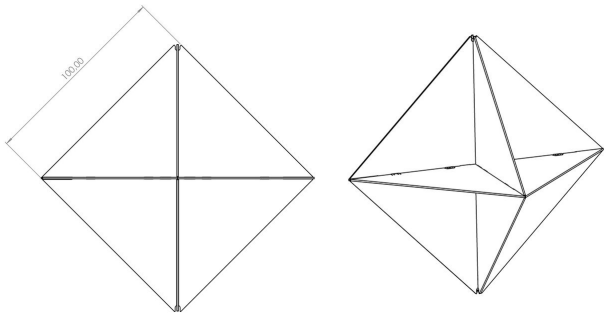

Figure 35: ADAR-specific test object

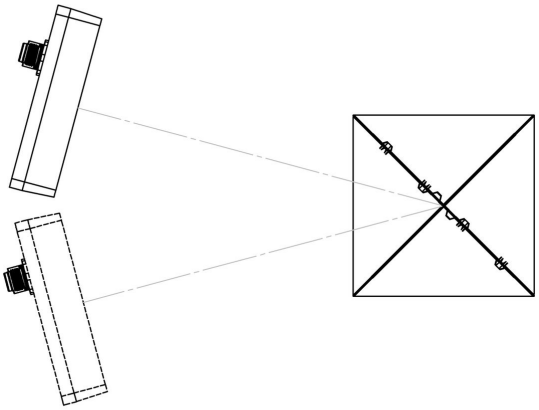

Figure 36: Recommended orientation of test object relative to ADAR

The ADAR-specific test object is a corner cube reflector with edge length 100mm and consist of 8 hollow pyramids. The corner cube reflects sound back toward the source over a wide range of orientations and provides a consistent, repeatable acoustic return.

> Various standards describe test objects that were developed for optical ESPE. These objects generally have weak acoustic reflectivity and are therefore unsuitable for validating an ADAR system.

How to use:

- Position the test object sequentially in several positions so that all key dimensions of the protective zone is checked. In particular, some poses are defined by standard as reference cases; where the test targets one of these, position the object accordingly.
- Make sure that the mounting fixture holding the test object in place does not trigger the detection itself – it is recommended that you monitor the test setup by viewing the point cloud.
- Direct the base of a pyramid approximately towards ADAR when testing zone boundaries and machine stopping function, to avoid getting too many reflections from the test object.

The ADAR-specific test object is available from Sonair (article number SPN1029A).

7.2.4. Re-validation after modification

Re-validation shall be performed after modifications that affect the safety function, including:

- Changes to configuration.
- Changes to system integration or machine affecting configuration or response time requirements.
- Replacement or update of ADAR.

The scope of re-validation shall be appropriate to the nature of the modification.

8. Maintenance and troubleshooting

Danger

Before any troubleshooting begins, the machinery or mobile system must be brought to a safe state.

- Ensure the hazardous machine is powered down or locked out
- Inform relevant personnel.
- Troubleshooting shall never involve overriding or bypassing safety protocols.

Danger

Do not physically modify or disassemble ADAR. Any hardware modification voids the safety certification and may result in unpredictable device behavior.

8.1. Regular maintenance

No periodic proof testing, adjustment or re-calibration of ADAR is required to maintain its safety function, provided that ADAR is used within the assumptions and constraints defined in this manual. Depending on the installation environment, cleaning may be needed.

Notice

Wear and tear, contamination, or physical damage can reduce detection reliability or cause frequent nuisance trips. Regular inspection and cleaning maintains both the effectiveness of the safety function and the availability of the machine.

To ensure safe and uninterrupted operation, the following inspections should be performed regularly. The machine manufacturer determines the inspection interval based on the operating environment, the machine type, and the applicable legal requirements.

- Visual inspection for mechanical damage, misalignment and contamination
- Check for firmware updates related to safety and security
- Check to ensure that the device does not exceed its intended mission time.

To ensure cybersecurity throughout ADAR's operational mission time, up-to-date firmware is required. The product operator shall implement organizational measures to regularly check for available updates. These updates must be installed on all installed devices as needed.

8.2. Cleaning instructions

Danger

Turn off the machine before cleaning ADAR. Cleaning while the machine is active may cause nuisance trips and unexpected machine movements.

8.2.1. Drying after exposure to water

If the device has been excessively exposed to water, proceed with the following steps to ensure proper operation:

1. Let the most water run off by waiting, or shaking gently.
2. Pat gently with a dry cloth or paper towel on all sides to remove remaining wet spots, making sure that the water is not pushed into the textile covered area on the front.
3. Leave the device to dry.

8.2.2. Cleaning after exposure to dirt or dust

If the device has been exposed to dirt or dust to the extent that it sits on the device surface, proceed with the following steps to ensure proper operation:

1. Shake or knock the device gently to remove dirt that is already loose.
2. Gently brush the device with a soft brush to remove any dirt that sits lightly.
3. Remove remaining dirt with a damp cloth, except for on the textile covered area on the front of the device.
4. Remove remaining dirt on the textile on the device front face by blowing pressurized air sideways onto the textile from ~10 cm distance.

8.3. Firmware update procedure

Firmware updates are performed using ADAR Designer over the device's Ethernet interface, see ADAR Designer User manual (SDN161).

After an update is completed, the device will automatically restart.

Firmware upgrade is password protected.

Do not abort a firmware upgrade once started. If you are having issues with device software update, contact support.

8.4. Replacing ADAR

The following conditions indicate that the device needs to be replaced:

- Persistent system faults
- Damage of enclosure, fabric sensor cover, connectors and cables.

Danger

Replacing ADAR without applying the validated configuration and performing re-validation puts the machine into service with an unverified safety function. Steps 4 and 7 of the procedure below are mandatory and shall not be omitted.

In case of damage, ADAR shall be replaced with another unit with validated configuration applied.

1. Disconnect cables from device.
2. Unscrew fastening screws.
3. Remove ADAR.
4. Apply the validated configuration to the replacement ADAR using ADAR Designer. Confirm that the configuration checksum reported by the replacement device matches the checksum of the validated configuration on record before proceeding.
5. Fasten the replacement device with fastening screws, note recommended torque in Mechanical installation.
6. Connect cables.
7. Perform re-verification and re-validation of the safety function in accordance with section 7. Re-validation is mandatory after replacement of ADAR.

8.5. Common issues and their solutions

The following tables describe common issues, their likely causes, and recommended actions.

8.5.1. Configuration

Indication	Possible cause	Recommended action
ADAR Designer not displaying sensor data	Incorrect configuration or network issues	Check network connections and ensure compatible versions of firmware and ADAR Designer.
Unexpected system behavior after configuration changes	Improper configuration	Review recent configuration changes for errors. If issues persist, reset to default settings and reconfigure.

Indication	Possible cause	Recommended action
Configuration does not upload	The device and external system use different API versions	Verify compatibility. Upgrade both systems to latest version.
Device not responding	Faulty Ethernet cable, wrong IP address.	Confirm that the correct port and driver are installed. Use a verified and updated version of ADAR Designer. Restart ADAR Designer. Check that no firewall or antivirus is blocking the interface. Observe LED on connected Ethernet port. If it is not reacting, contact the supplier.
Wrong zone is selected	Incorrect input wiring, incorrect encoder configuration.	Verify digital input connections and logic polarity. Ensure ZONE_SELECT inputs are stable and match the configuration settings. Ensure correct safe input encoding by re-uploading the configuration.
Cannot ping the device	Wrong network settings, firewall, loose or missing physical cabling.	Restart the device by unplugging the power and re-plugging it. Check that the Ethernet cable is properly connected. If your network is using a DHCP server, make sure that DHCP is enabled in the device configuration page. If you have disabled DHCP and do not know the set static IP address, do a factory reset. This will reset the device to having DHCP disabled and the default IP address (`10.20.30.40`).

8.5.2. Connectivity

Indication	Possible cause	Recommended action
LEDs are off **No OSSD output**	Device not powered, or wiring fault.	Verify power supply, check wiring.
Device does not start or seems stuck after init	Power supply out of tolerance, unstable voltage, incorrect wiring.	Verify the power source is within rated voltage range. Check connector pinout and polarity.
Firmware update failures	Using incorrect update procedures or files	Follow the firmware update instructions, see Firmware update procedure. Ensure that a valid firmware file is used and that the update process is not interrupted. Do not disconnect the device from power after starting an upgrade, even if it takes longer than expected.

8.5.3. Errors and faults

Indication	Possible cause	Recommended action
LEDs blinking in sync (1 Hz) OSSD LED: Red Status LED: Yellow **OSSD signal remains OFF**	The device is in an error state.	Read out an error code using ADAR Designer or CoAP. Refer to the error codes section for more information.
LEDs blinking in sync (2 Hz) OSSD LED: Red Status LED: Yellow **OSSD signal remains OFF**	System fault.	Read out error messages in Fault state. Perform a system reset by power cycling the device. Contact Sonair if issue persists.

8.5.4. Detection

Indication	Possible cause	Recommended action
Unexpected zone state for objects near the zone boundary	Device misalignment relative to monitored zone. Wrong ambient temperature setting. Wrong zone is selected.	Verify that sensors are properly aligned and mounted securely. Verify configuration's ambient temperature matches config setting. Check zone selection settings and physical wiring.
Device not detecting objects	Objects with extreme sound-dividing shapes (e.g., cone tip), highly sound-absorbing surfaces (e.g., open-pore foam) or objects near the floor cannot be reliably detected.	Adjust “floor suppression factor” to increase detection sensitivity. Are the objects described in Basics of detection capability ?
Device fails to detect small objects	Object size below the minimum detectable size.	Ensure objects meet the minimum size requirements.
Frequent false detections near the floor	Device misalignment. Distance to floor incorrectly configured. Floor exclusion zone incorrectly configured. Debris on the floor.	Adjust sensor alignment. Validate “distance to floor” setting. Validate floor exclusion zone geometry. Increase the “floor suppression factor”.
Frequent false detections in general	Noise from other ultrasound sources.	Minimize other ultrasonic sources in the environment.

8.5.5. Error codes

In case of an error or a fault, OSSD goes OFF and the point cloud must be disregarded.

Error code	Description	Recommended actions
0x1	A zone preset is not defined for the current ZONE_SELECT input.	• Verify that the desired configuration has been uploaded to the device. • Verify that the encoding is configured correctly under “Global device settings -> Hardware interconnect -> Safe input encoding”. • Verify that the ZONE_SELECT lines have the expected value.
0x2	The current ZONE_SELECT input can not be decoded to a zone preset ID using the configured safe input encoding. (This error might trigger 0x8 as well).	
0x4	Reserved for future use.	Contact the supplier.
0x8	Sensor error.	
0x10		
0x20		
0x40	Too much ultrasound noise in environment.	Investigate if ultrasonic sound sources are present, and if they can be reduced. Reconfigure coexistence settings.
0x80	Synchronization error. This error occurs when time synchronization is enabled for the device, but fails to operate as intended.	• Verify that there is one (and only one) device configured as “synchronization server” on the network, and that this device is powered on. • Verify that the IP address of the device providing the synchronization server matches the value provided in “Specify synchronization server” (if this option is activated).
0x100	Processing timeout, too many detections.	Contact the supplier if error persists.
0x200	The sensor is obstructed.	• Verify that no objects are within 5 cm range to the sensor origin (in any direction). • Verify that no debris is blocking the acoustic ports of the device.
0x400	Sensor error.	Contact the supplier.

If other error codes than the ones listed in the table above are observed, it is possible that multiple errors occurred simultaneously. For example, the code 0x140 would indicate that there was a processing timeout at the same time as there was too much ultrasound noise in the environment.

8.6. Return to the supplier

If you need to return or get service on the product, contact your sales representative and they will help you arrange this.

Returning the device to the supplier ensures proper component breakdown, secure data handling, and verified environmental compliance.

8.7. Contact details and return

For safety or security related questions or events, feature requests, or technical questions, contact the supplier Sonair:

Sonair AS, Gullhaug Torg 2D, 0484 Oslo, Norway
Email: support@sonair.com[3]
Website: sonair.com[4]

When contacting support, provide the following information:

- **Device name** - serial number on lower side of ADAR, or read out from device configuration
- **Error log or behavior**
- **Installation details**
- **Firmware and configuration version**

Support services include diagnosis and remote guidance, RMA (return merchandise authorisation) for replacements or repairs, and product documentation and update recommendations.

For product returns or repairs, contact your Sonair sales representative. Returning the device to Sonair ensures proper component breakdown and verified environmental compliance.

3. mailto:support@sonair.com
4. https://www.sonair.com/

9. Disposal

ADAR contains electrical parts. The applicable national regulations for electronic components must be observed during disposal.

For more detailed information about disposal, contact the waste disposal services or the representative from whom you purchased the product.

Any original packaging or protective foam should be recycled if possible or disposed of in accordance with local waste sorting rules.

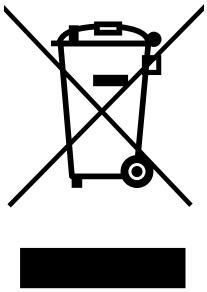

9.1. Data security and configuration hygiene

In many installations, the safety device contains sensitive configuration data including:

- IP addresses or communication settings
- Passwords
- Protective zone geometries
- Log histories

> Before disposing of the device, reset it to its factory settings.
>
> This prevents unauthorized access to private data.

Appendix A Device communication protocols

This appendix outlines the Ethernet-based communication protocols used by the device, primarily over the Constrained Application Protocol (CoAP). It is intended for developers and advanced users integrating or troubleshooting communication between the device and external systems such as ADAR Designer or ROS2-based applications.

This Appendix serves as an overview. Further details can be found on the ADAR API GitHub repository[5].

A.A. Protocol overview

- Payloads conform to CoAP structure; see CoAP on Wikipedia[6] or RFC7252[7] for general reference.
- CoAP "Observe" mechanism is used for resource updates; see RFC7641 Section 1.2[8].

A.B. CoAP message structure

- Message ID: Used for tracking/resend.
- Token: Unique ID per message.
- Options: Refer to RFC7252 Section 5.10[9].
- URI_PATH: Resource path (e.g., pointcloud/v1, status/v1).
- Blockwise Transfer: Required for large payloads per RFC7959[10].

A.C. User requests

- GET/PUT requests to public resources (e.g., state, status).
- PUT requests contain binary-encoded payloads; GET requests do not.
- Responses include a result code per RFC7252 Section 5.9[11].

A.D. Observable resources

- Common resources: pointcloud, status.
- Observation prioritization is necessary due to the 100 Mbit/s bandwidth limit.

5. https://github.com/Sonair-AS/adar_api
6. https://en.wikipedia.org/wiki/Constrained_Application_Protocol
7. https://datatracker.ietf.org/doc/html/rfc7252
8. https://datatracker.ietf.org/doc/html/rfc7641#section-1.2
9. https://datatracker.ietf.org/doc/html/rfc7252#section-5.10
10. https://datatracker.ietf.org/doc/html/rfc7959
11. https://datatracker.ietf.org/doc/html/rfc7252#section-5.9

A.E. Public API resources

Resource	Method	Description
`/pointcloud/v1`	GET, OBSERVE	3D point cloud data
`/status/v1`	GET	Device status
`/device_info/v1`	GET	Device identification. Hardware and firmware metadata.
`/network_config/v1`	GET	Network configuration. DHCP/static IP settings etc.
`/errors/v1`	GET	Device error codes. Human-readable list of active errors.
`/transmission_code/v1`	GET/PUT	Transmission code index. Identifier for transmission codes.
`/protocol_hash/v1`	GET	Protocol version hash
`/state/v1`	GET	Current device state
`/login/v1`	GET	Login challenge token
`/observers/v1`	DELETE	Clear all observers
`/logout/v1`	PUT	End session
`/login/v1`	PUT	Submit login credentials

Resources that require login authentication:

Resource	Method	Required State(s)[12]	Description
`/state/v1`	PUT	Enabled, Disabled, Error, SelfTest	Set device state
`/network_config/v1`	PUT	Disabled	Update network configuration
`/firmware/v1`	PUT	Disabled, Fault	Upload firmware image
`/factory_reset/v1`	POST	Disabled	Factory reset
`/reboot/v1`	PUT	Any	Reboot device

12. https://github.com/Sonair-AS/adar_api/blob/main/README.md#device-states

Note:

- Blockwise CoAP transfer is used for large payloads.
- Further details can be found on the ADAR API GitHub repository[13].

13. https://github.com/Sonair-AS/adar_api

Appendix B Device communication I/O

Zone	ZS0	ZS1	ZS2	ZS3	ZS4	ZS5	ZS6	ZS7	ZS8	ZS9	ZS10[1)]
0	0	0	0	0	0	1	1	1	1	1	x
1	1	0	0	0	0	0	1	1	1	1	x
2	0	1	0	0	0	1	0	1	1	1	x
3	1	1	0	0	0	0	0	1	1	1	x
4	0	0	1	0	0	1	1	0	1	1	x
5	1	0	1	0	0	0	1	0	1	1	x
6	0	1	1	0	0	1	0	0	1	1	x
7	1	1	1	0	0	0	0	0	1	1	x
8	0	0	0	1	0	1	1	1	0	1	x
9	1	0	0	1	0	0	1	1	0	1	x
10	0	1	0	1	0	1	0	1	0	1	x
11	1	1	0	1	0	0	0	1	0	1	x
12	0	0	1	1	0	1	1	0	0	1	x
13	1	0	1	1	0	0	1	0	0	1	x
14	0	1	1	1	0	1	0	0	0	1	x
15	1	1	1	1	0	0	0	0	0	1	x
16	0	0	0	0	1	1	1	1	1	0	x
17	1	0	0	0	1	0	1	1	1	0	x
18	0	1	0	0	1	1	0	1	1	0	x
19	1	1	0	0	1	0	0	1	1	0	x
20	0	0	1	0	1	1	1	0	1	0	x
21	1	0	1	0	1	0	1	0	1	0	x
22	0	1	1	0	1	1	0	0	1	0	x
23	1	1	1	0	1	0	0	0	1	0	x

Zone	ZS0	ZS1	ZS2	ZS3	ZS4	ZS5	ZS6	ZS7	ZS8	ZS9	ZS10[1)]
24	0	0	0	1	1	1	1	1	0	0	x
25	1	0	0	1	1	0	1	1	0	0	x
26	0	1	0	1	1	1	0	1	0	0	x
27	1	1	0	1	1	0	0	1	0	0	x
28	0	0	1	1	1	1	1	0	0	0	x
29	1	0	1	1	1	0	1	0	0	0	x
30	0	1	1	1	1	1	0	0	0	0	x
31	1	1	1	1	1	0	0	0	0	0	x

Table 21: Double inverted (5 bits for selecting zone + 5 bits redundancy -> 32 protective zones)

[1)]Zone select bit 10 is not in use for Double inverted, and can be connected to 0 or be left floating.

Zone	ZS0	ZS1	ZS2	ZS3	ZS4	ZS5	ZS6	ZS7	ZS8	ZS9	ZS10
0 [2)]	0	0	0	0	0	0	0	0	0	0	0
1	1	0	0	0	0	0	0	1	1	1	0
2	0	1	0	0	0	0	0	0	1	1	1
3	1	1	0	0	0	0	0	1	0	0	1
4	0	0	1	0	0	0	0	1	0	1	0
5	1	0	1	0	0	0	0	0	1	0	0
6	0	1	1	0	0	0	0	1	1	0	1
7	1	1	1	0	0	0	0	0	0	1	1
8	0	0	0	1	0	0	0	0	1	0	1
9	1	0	0	1	0	0	0	1	0	1	1
10	0	1	0	1	0	0	0	0	0	1	0
11	1	1	0	1	0	0	0	1	1	0	0
12	0	0	1	1	0	0	0	1	1	1	1
13	1	0	1	1	0	0	0	0	0	0	1
14	0	1	1	1	0	0	0	1	0	0	0

Zone	ZS0	ZS1	ZS2	ZS3	ZS4	ZS5	ZS6	ZS7	ZS8	ZS9	ZS10
15	1	1	1	1	0	0	0	0	1	1	0
16	0	0	0	0	1	0	0	1	0	1	1
17	1	0	0	0	1	0	0	0	1	0	1
18	0	1	0	0	1	0	0	1	1	0	0
19	1	1	0	0	1	0	0	0	0	1	0
20	0	0	1	0	1	0	0	0	0	0	1
21	1	0	1	0	1	0	0	1	1	1	1
22	0	1	1	0	1	0	0	0	1	1	0
23	1	1	1	0	1	0	0	1	0	0	0
24	0	0	0	1	1	0	0	1	1	1	0
25	1	0	0	1	1	0	0	0	0	0	0
26	0	1	0	1	1	0	0	1	0	0	1
27	1	1	0	1	1	0	0	0	1	1	1
28	0	0	1	1	1	0	0	0	1	0	0
29	1	0	1	1	1	0	0	1	0	1	0
30	0	1	1	1	1	0	0	0	0	1	1
31	1	1	1	1	1	0	0	1	1	0	1
32	0	0	0	0	0	1	0	1	1	0	0
33	1	0	0	0	0	1	0	0	0	1	0
34	0	1	0	0	0	1	0	1	0	1	1
35	1	1	0	0	0	1	0	0	1	0	1
36	0	0	1	0	0	1	0	0	1	1	0
37	1	0	1	0	0	1	0	1	0	0	0
38	0	1	1	0	0	1	0	0	0	0	1
39	1	1	1	0	0	1	0	1	1	1	1
40	0	0	0	1	0	1	0	1	0	0	1
41	1	0	0	1	0	1	0	0	1	1	1

Zone	ZS0	ZS1	ZS2	ZS3	ZS4	ZS5	ZS6	ZS7	ZS8	ZS9	ZS10
42	0	1	0	1	0	1	0	1	1	1	0
43	1	1	0	1	0	1	0	0	0	0	0
44	0	0	1	1	0	1	0	0	0	1	1
45	1	0	1	1	0	1	0	1	1	0	1
46	0	1	1	1	0	1	0	0	1	0	0
47	1	1	1	1	0	1	0	1	0	1	0
48	0	0	0	0	1	1	0	0	1	1	1
49	1	0	0	0	1	1	0	1	0	0	1
50	0	1	0	0	1	1	0	0	0	0	0
51	1	1	0	0	1	1	0	1	1	1	0
52	0	0	1	0	1	1	0	1	1	0	1
53	1	0	1	0	1	1	0	0	0	1	1
54	0	1	1	0	1	1	0	1	0	1	0
55	1	1	1	0	1	1	0	0	1	0	0
56	0	0	0	1	1	1	0	0	0	1	0
57	1	0	0	1	1	1	0	1	1	0	0
58	0	1	0	1	1	1	0	0	1	0	1
59	1	1	0	1	1	1	0	1	0	1	1
60	0	0	1	1	1	1	0	1	0	0	0
61	1	0	1	1	1	1	0	0	1	1	0
62	0	1	1	1	1	1	0	1	1	1	1
63	1	1	1	1	1	1	0	0	0	0	1
64	0	0	0	0	0	0	1	0	1	1	0
65	1	0	0	0	0	0	1	1	0	0	0
66	0	1	0	0	0	0	1	0	0	0	1
67	1	1	0	0	0	0	1	1	1	1	1
68	0	0	1	0	0	0	1	1	1	0	0

Zone	ZS0	ZS1	ZS2	ZS3	ZS4	ZS5	ZS6	ZS7	ZS8	ZS9	ZS10
69	1	0	1	0	0	0	1	0	0	1	0
70	0	1	1	0	0	0	1	1	0	1	1
71	1	1	1	0	0	0	1	0	1	0	1
72	0	0	0	1	0	0	1	0	0	1	1
73	1	0	0	1	0	0	1	1	1	0	1
74	0	1	0	1	0	0	1	0	1	0	0
75	1	1	0	1	0	0	1	1	0	1	0
76	0	0	1	1	0	0	1	1	0	0	1
77	1	0	1	1	0	0	1	0	1	1	1
78	0	1	1	1	0	0	1	1	1	1	0
79	1	1	1	1	0	0	1	0	0	0	0
80	0	0	0	0	1	0	1	1	1	0	1
81	1	0	0	0	1	0	1	0	0	1	1
82	0	1	0	0	1	0	1	1	0	1	0
83	1	1	0	0	1	0	1	0	1	0	0
84	0	0	1	0	1	0	1	0	1	1	1
85	1	0	1	0	1	0	1	1	0	0	1
86	0	1	1	0	1	0	1	0	0	0	0
87	1	1	1	0	1	0	1	1	1	1	0
88	0	0	0	1	1	0	1	1	0	0	0
89	1	0	0	1	1	0	1	0	1	1	0
90	0	1	0	1	1	0	1	1	1	1	1
91	1	1	0	1	1	0	1	0	0	0	1
92	0	0	1	1	1	0	1	0	0	1	0
93	1	0	1	1	1	0	1	1	1	0	0
94	0	1	1	1	1	0	1	0	1	0	1
95	1	1	1	1	1	0	1	1	0	1	1

Zone	ZS0	ZS1	ZS2	ZS3	ZS4	ZS5	ZS6	ZS7	ZS8	ZS9	ZS10
96	0	0	0	0	0	1	1	1	0	1	0
97	1	0	0	0	0	1	1	0	1	0	0
98	0	1	0	0	0	1	1	1	1	0	1
99	1	1	0	0	0	1	1	0	0	1	1
100	0	0	1	0	0	1	1	0	0	0	0
101	1	0	1	0	0	1	1	1	1	1	0
102	0	1	1	0	0	1	1	0	1	1	1
103	1	1	1	0	0	1	1	1	0	0	1
104	0	0	0	1	0	1	1	1	1	1	1
105	1	0	0	1	0	1	1	0	0	0	1
106	0	1	0	1	0	1	1	1	0	0	0
107	1	1	0	1	0	1	1	0	1	1	0
108	0	0	1	1	0	1	1	0	1	0	1
109	1	0	1	1	0	1	1	1	0	1	1
110	0	1	1	1	0	1	1	0	0	1	0
111	1	1	1	1	0	1	1	1	1	0	0
112	0	0	0	0	1	1	1	0	0	0	1
113	1	0	0	0	1	1	1	1	1	1	1
114	0	1	0	0	1	1	1	0	1	1	0
115	1	1	0	0	1	1	1	1	0	0	0
116	0	0	1	0	1	1	1	1	0	1	1
117	1	0	1	0	1	1	1	0	1	0	1
118	0	1	1	0	1	1	1	1	1	0	0
119	1	1	1	0	1	1	1	0	0	1	0
120	0	0	0	1	1	1	1	0	1	0	0
121	1	0	0	1	1	1	1	1	0	1	0
122	0	1	0	1	1	1	1	0	0	1	1

Zone	ZS0	ZS1	ZS2	ZS3	ZS4	ZS5	ZS6	ZS7	ZS8	ZS9	ZS10
123	1	1	0	1	1	1	1	1	1	0	1
124	0	0	1	1	1	1	1	1	1	1	0
125	1	0	1	1	1	1	1	0	0	0	0
126	0	1	1	1	1	1	1	1	0	0	1
127	1	1	1	1	1	1	1	0	1	1	1

Table 22: CRC (7 bits for selecting zone + 4 bits checksum) -> 128 protective zones

[2)]Zone preset ID 0 shall not be used, as a complete cable break would go undetected.
Safe selection of 128 zones is achieved by adding a 4 bit CRC. The checksum is CRC-4-ITU (ITU G.704).

Appendix C Minimum zone length

The following tables give the minimum allowed size of a bounding box around the protective zone. The box has vertices (B_x, B_y, B_z). The values in the tables are calculated based on the geometric restrictions implied by the specifications in Technical specifications (Table 4).

Limbs — Zmin [mm]

Minimum zone length (max range 2.5 m)

By\Bx	0	50	100	150	200	250	300	350	400	450	500	550	600	650	700	750	800	850	900	950	1000	1050	1100	1150	1200	1250	1300	1350	1400	1450	1500	1550	1600	1650	1700	1750	1800	1850	1900	1950	2000	2050	2100	2150	2200	2250	2300	2350	2400	2450	2500
0	0	9	18	26	35	44	53	62	71	79	88	97	106	115	123	132	141	150	159	168	176	185	194	203	212	220	229	238	247	256	866	895	924	953	981	1010	1039	1068	1097	1126	1155	1184	1212	1241	—	—	—	—	—	—	—
50	9	12	20	28	36	45	54	62	71	80	89	97	106	115	124	133	141	150	159	168	177	185	194	203	212	221	229	238	247	256	867	895	924	953	982	1011	1040	1068	1097	1126	1155	1184	1213	1242	—	—	—	—	—	—	—
100	18	20	25	32	39	47	56	64	73	81	90	99	107	116	125	133	142	151	160	168	177	186	195	204	212	221	230	239	247	256	868	897	926	954	983	1012	1041	1070	1098	1127	1156	1185	1214	1243	—	—	—	—	—	—	—
150	26	28	32	37	44	51	59	67	75	84	92	101	109	118	126	135	144	152	161	170	178	187	196	204	213	222	231	240	248	257	870	899	928	957	985	1014	1043	1072	1100	1129	1158	1187	1216	1244	—	—	—	—	—	—	—
200	35	36	39	44	50	56	64	71	79	87	95	103	112	120	128	137	145	154	163	171	180	188	197	206	215	223	232	241	249	258	874	902	931	960	988	1017	1046	1074	1103	1132	1160	1189	1218	1247	—	—	—	—	—	—	—
250	44	45	47	51	56	62	69	76	83	91	99	107	115	123	131	139	148	156	165	173	182	190	199	208	216	225	233	242	251	259	878	906	935	964	992	1021	1049	1078	1106	1135	1164	1192	1221	1250	—	—	—	—	—	—	—
300	53	54	56	59	64	69	75	81	88	95	103	110	118	126	134	142	151	159	167	176	184	193	201	210	218	227	235	244	252	855	883	912	940	968	997	1025	1054	1082	1111	1139	1168	1196	1225	—	—	—	—	—	—	—	—
350	62	62	64	67	71	76	81	87	94	101	108	115	122	130	138	146	154	162	170	179	187	195	204	212	220	229	237	246	254	861	889	917	946	974	1002	1030	1059	1087	1115	1144	1172	1201	1229	—	—	—	—	—	—	—	—
400	71	71	73	75	79	83	88	94	100	106	113	120	127	135	142	150	158	166	174	182	190	198	206	215	223	231	240	248	257	868	896	924	952	980	1008	1036	1065	1093	1121	1149	1178	1206	1234	—	—	—	—	—	—	—	—
450	79	80	81	84	87	91	95	101	106	112	119	125	132	139	147	154	162	170	177	185	193	201	210	218	226	234	243	251	259	877	904	932	960	987	1015	1043	1071	1099	1127	1155	1184	1212	1240	—	—	—	—	—	—	—	—
500	88	89	90	92	95	99	103	108	113	119	125	131	138	145	152	159	166	174	182	189	197	205	213	221	229	237	246	254	858	886	913	940	968	995	1023	1051	1079	1106	1134	1162	1190	1218	1246	—	—	—	—	—	—	—	—
550	97	97	99	101	103	107	110	115	120	125	131	137	144	150	157	164	171	179	186	194	201	209	217	225	233	241	249	257	868	895	922	950	977	1004	1032	1059	1087	1114	1142	1170	1198	1225	—	—	—	—	—	—	—	—	—
600	106	106	107	109	112	115	118	122	127	132	138	144	150	156	163	169	176	183	191	198	206	213	221	229	237	244	252	853	879	906	933	960	987	1014	1041	1068	1095	1123	1150	1178	1206	1233	—	—	—	—	—	—	—	—	—
650	115	115	116	118	120	123	126	130	135	139	145	150	156	162	168	175	182	189	196	203	210	218	225	233	241	248	256	865	891	917	944	970	997	1024	1051	1078	1105	1132	1159	1187	1214	1242	—	—	—	—	—	—	—	—	—
700	123	124	125	126	128	131	134	138	142	147	152	157	163	168	175	181	187	194	201	208	215	223	230	237	245	253	260	878	904	930	956	982	1008	1035	1061	1088	1115	1142	1169	1196	1223	—	—	—	—	—	—	—	—	—	—
750	132	133	133	135	137	139	142	146	150	154	159	164	169	175	181	187	193	200	207	213	220	228	235	242	250	257	867	892	917	943	968	994	1020	1046	1073	1099	1126	1153	1179	1206	1233	—	—	—	—	—	—	—	—	—	—
800	141	141	142	144	145	148	151	154	158	162	166	171	176	182	187	193	199	206	212	219	226	233	240	247	254	857	881	906	931	956	981	1007	1033	1059	1085	1111	1137	1164	1190	1217	1244	—	—	—	—	—	—	—	—	—	—
850	150	150	151	152	154	156	159	162	166	170	174	179	183	189	194	200	206	212	218	225	231	238	245	252	259	873	897	921	946	970	995	1021	1046	1072	1097	1123	1149	1175	1202	1228	—	—	—	—	—	—	—	—	—	—	—
900	159	159	160	161	163	165	167	170	174	177	182	186	191	196	201	207	212	218	224	231	237	244	251	257	866	889	913	937	961	985	1010	1035	1060	1085	1111	1136	1162	1188	1214	1240	—	—	—	—	—	—	—	—	—	—	—
950	168	168	168	170	171	173	176	179	182	185	189	194	198	203	208	213	219	225	231	237	243	250	256	861	884	906	930	953	977	1001	1025	1050	1074	1099	1124	1150	1175	1201	1226	—	—	—	—	—	—	—	—	—	—	—	—
1000	176	177	177	178	180	182	184	187	190	193	197	201	206	210	215	220	226	231	237	243	249	256	858	880	902	924	947	970	993	1017	1041	1065	1089	1114	1139	1164	1189	1214	1240	—	—	—	—	—	—	—	—	—	—	—	—
1050	185	185	186	187	188	190	193	195	198	201	205	209	213	218	223	228	233	238	244	250	256	857	878	899	921	943	965	987	1010	1034	1057	1081	1105	1129	1154	1178	1203	1228	—	—	—	—	—	—	—	—	—	—	—	—	—
1100	194	194	195	196	197	199	201	204	206	210	213	217	221	225	230	235	240	245	251	256	858	878	898	919	940	961	983	1005	1028	1051	1074	1097	1121	1145	1169	1193	1218	1243	—	—	—	—	—	—	—	—	—	—	—	—	—
1150	203	203	204	204	206	208	210	212	215	218	221	225	229	233	237	242	247	252	257	861	880	899	919	939	960	981	1002	1024	1046	1068	1091	1114	1138	1161	1185	1209	1233	—	—	—	—	—	—	—	—	—	—	—	—	—	—
1200	212	212	212	213	215	216	218	220	223	226	229	233	237	241	245	250	254	259	866	884	902	921	940	960	980	1000	1021	1043	1065	1087	1109	1132	1155	1178	1201	1225	1249	—	—	—	—	—	—	—	—	—	—	—	—	—	—
1250	220	221	221	222	223	225	227	229	231	234	237	241	244	248	253	257	857	873	889	906	924	943	961	981	1000	1021	1041	1062	1084	1105	1127	1150	1172	1195	1218	1242	—	—	—	—	—	—	—	—	—	—	—	—	—	—
1300	229	229	230	231	232	233	235	237	240	243	246	249	252	256	260	867	881	897	913	930	947	965	983	1002	1021	1041	1061	1082	1103	1124	1146	1168	1190	1213	1236	—	—	—	—	—	—	—	—	—	—	—	—	—	—	—
1350	238	238	239	240	241	242	244	246	248	251	254	257	853	865	878	892	906	921	937	953	970	987	1005	1024	1043	1062	1082	1102	1123	1144	1165	1187	1209	1231	—	—	—	—	—	—	—	—	—	—	—	—	—	—	—	—
1400	247	247	247	248	249	251	252	254	257	259	858	868	879	891	904	917	931	946	961	977	993	1010	1028	1046	1065	1084	1103	1123	1143	1164	1185	1206	1227	1249	—	—	—	—	—	—	—	—	—	—	—	—	—	—	—	—
1450	256	256	256	257	258	259	855	861	868	877	886	895	906	917	930	943	956	970	985	1001	1017	1034	1051	1068	1087	1105	1124	1144	1164	1184	1205	1225	1247	—	—	—	—	—	—	—	—	—	—	—	—	—	—	—	—	—
1500	866	867	868	870	874	878	883	889	896	904	913	922	933	944	956	968	981	995	1010	1025	1041	1057	1074	1091	1109	1127	1146	1165	1185	1205	1225	1245	—	—	—	—	—	—	—	—	—	—	—	—	—	—	—	—	—	—
1550	895	895	897	899	902	906	912	917	924	932	940	950	960	970	982	994	1007	1021	1035	1050	1065	1081	1097	1114	1132	1150	1168	1187	1206	1225	1245	—	—	—	—	—	—	—	—	—	—	—	—	—	—	—	—	—	—	—
1600	924	924	926	928	931	935	940	946	952	960	968	977	987	997	1008	1020	1033	1046	1060	1074	1089	1105	1121	1138	1155	1172	1190	1209	1227	1247	—	—	—	—	—	—	—	—	—	—	—	—	—	—	—	—	—	—	—	—
1650	953	953	954	957	960	964	968	974	980	987	995	1004	1014	1024	1035	1046	1059	1072	1085	1099	1114	1129	1145	1161	1178	1195	1213	1231	1249	—	—	—	—	—	—	—	—	—	—	—	—	—	—	—	—	—	—	—	—	—
1700	981	982	983	985	988	992	997	1002	1008	1015	1023	1032	1041	1051	1061	1073	1085	1097	1111	1124	1139	1154	1169	1185	1201	1218	1236	—	—	—	—	—	—	—	—	—	—	—	—	—	—	—	—	—	—	—	—	—	—	—
1750	1010	1011	1012	1014	1017	1021	1025	1030	1036	1043	1051	1059	1068	1078	1088	1099	1111	1123	1136	1150	1164	1178	1193	1209	1225	1242	—	—	—	—	—	—	—	—	—	—	—	—	—	—	—	—	—	—	—	—	—	—	—	—
1800	1039	1040	1041	1043	1046	1049	1054	1059	1065	1071	1079	1087	1095	1105	1115	1126	1137	1149	1162	1175	1189	1203	1218	1233	1249	—	—	—	—	—	—	—	—	—	—	—	—	—	—	—	—	—	—	—	—	—	—	—	—	—
1850	1068	1068	1070	1072	1074	1078	1082	1087	1093	1099	1106	1114	1123	1132	1142	1153	1164	1175	1188	1201	1214	1228	1243	—	—	—	—	—	—	—	—	—	—	—	—	—	—	—	—	—	—	—	—	—	—	—	—	—	—	—	—
1900	1097	1097	1098	1100	1103	1106	1111	1115	1121	1127	1134	1142	1150	1159	1169	1179	1190	1202	1214	1226	1240	—	—	—	—	—	—	—	—	—	—	—	—	—	—	—	—	—	—	—	—	—	—	—	—	—	—	—	—	—	—
1950	1126	1126	1127	1129	1132	1135	1139	1144	1149	1155	1162	1170	1178	1187	1196	1206	1217	1228	1240	—	—	—	—	—	—	—	—	—	—	—	—	—	—	—	—	—	—	—	—	—	—	—	—	—	—	—	—	—	—	—	—
2000	1155	1155	1156	1158	1160	1164	1168	1172	1178	1184	1190	1198	1206	1214	1223	1233	1244	—	—	—	—	—	—	—	—	—	—	—	—	—	—	—	—	—	—	—	—	—	—	—	—	—	—	—	—	—	—	—	—	—	—
2050	1184	1184	1185	1187	1189	1192	1196	1201	1206	1212	1218	1225	1233	1242	—	—	—	—	—	—	—	—	—	—	—	—	—	—	—	—	—	—	—	—	—	—	—	—	—	—	—	—	—	—	—	—	—	—	—	—
2100	1212	1213	1214	1216	1218	1221	1225	1229	1234	1240	1246	—	—	—	—	—	—	—	—	—	—	—	—	—	—	—	—	—	—	—	—	—	—	—	—	—	—	—	—	—	—	—	—	—	—	—	—	—	—	—
2150	1241	1242	1243	1244	1247	1250	—	—	—	—	—	—	—	—	—	—	—	—	—	—	—	—	—	—	—	—	—	—	—	—	—	—	—	—	—	—	—	—	—	—	—	—	—	—	—	—	—	—	—	—	—
2200	—	—	—	—	—	—	—	—	—	—	—	—	—	—	—	—	—	—	—	—	—	—	—	—	—	—	—	—	—	—	—	—	—	—	—	—	—	—	—	—	—	—	—	—	—	—	—	—	—	—	—
2250	—	—	—	—	—	—	—	—	—	—	—	—	—	—	—	—	—	—	—	—	—	—	—	—	—	—	—	—	—	—	—	—	—	—	—	—	—	—	—	—	—	—	—	—	—	—	—	—	—	—	—
2300	—	—	—	—	—	—	—	—	—	—	—	—	—	—	—	—	—	—	—	—	—	—	—	—	—	—	—	—	—	—	—	—	—	—	—	—	—	—	—	—	—	—	—	—	—	—	—	—	—	—	—
2350	—	—	—	—	—	—	—	—	—	—	—	—	—	—	—	—	—	—	—	—	—	—	—	—	—	—	—	—	—	—	—	—	—	—	—	—	—	—	—	—	—	—	—	—	—	—	—	—	—	—	—
2400	—	—	—	—	—	—	—	—	—	—	—	—	—	—	—	—	—	—	—	—	—	—	—	—	—	—	—	—	—	—	—	—	—	—	—	—	—	—	—	—	—	—	—	—	—	—	—	—	—	—	—
2450	—	—	—	—	—	—	—	—	—	—	—	—	—	—	—	—	—	—	—	—	—	—	—	—	—	—	—	—	—	—	—	—	—	—	—	—	—	—	—	—	—	—	—	—	—	—	—	—	—	—	—
2500	—	—	—	—	—	—	—	—	—	—	—	—	—	—	—	—	—	—	—	—	—	—	—	—	—	—	—	—	—	—	—	—	—	—	—	—	—	—	—	—	—	—	—	—	—	—	—	—	—	—	—

Torso — Zmin [mm]

Minimum zone length (max range 3.0 m)

By\Bx	0	50	100	150	200	250	300	350	400	450	500	550	600	650	700	750	800	850	900	950	1000	1050	1100	1150	1200	1250	1300	1350	1400	1450	1500	1550	1600	1650	1700	1750	1800	1850	1900	1950	2000	2050	2100	2150	2200	2250	2300	2350	2400	2450	2500	2550	2600	2650	2700	2750	2800	2850	2900	2950	3000
0	0	9	18	26	35	44	53	62	71	79	88	97	106	115	123	132	141	150	159	168	176	185	194	203	212	220	229	238	247	256	264	273	282	291	300	309	317	326	335	344	536	549	563	576	589	603	616	630	643	656	670	683	697	710	723	737	750	764	—	—	—
50	9	12	20	28	36	45	54	62	71	80	89	97	106	115	124	133	141	150	159	168	177	185	194	203	212	221	229	238	247	256	265	273	282	291	300	309	318	326	335	344	536	549	563	576	590	603	616	630	643	657	670	683	697	710	724	737	750	764	—	—	—
100	18	20	25	32	39	47	56	64	73	81	90	99	107	116	125	133	142	151	160	168	177	186	195	204	212	221	230	239	247	256	265	274	283	291	300	309	318	327	335	344	537	550	563	577	590	603	617	630	644	657	670	684	697	711	724	737	751	764	—	—	—
150	26	28	32	37	44	51	59	67	75	84	92	101	109	118	126	135	144	152	161	170	178	187	196	204	213	222	231	240	248	257	266	275	283	292	301	310	318	327	336	345	537	551	564	577	591	604	618	631	644	658	671	684	698	711	725	738	751	765	—	—	—
200	35	36	39	44	50	56	64	71	79	87	95	103	112	120	128	137	145	154	163	171	180	188	197	206	215	223	232	241	249	258	267	276	284	293	302	311	319	328	337	346	539	552	565	579	592	605	619	632	645	659	672	685	699	712	725	739	752	766	—	—	—
250	44	45	47	51	56	62	69	76	83	91	99	107	115	123	131	139	148	156	165	173	182	190	199	208	216	225	233	242	251	259	268	277	286	294	303	312	320	329	338	347	540	553	567	580	593	607	620	633	647	660	673	687	700	713	727	740	753	767	—	—	—
300	53	54	56	59	64	69	75	81	88	95	103	110	118	126	134	142	151	159	167	176	184	193	201	210	218	227	235	244	252	261	270	278	287	296	304	313	322	330	339	529	542	555	568	582	595	608	622	635	648	661	675	688	701	715	728	741	755	768	—	—	—
350	62	62	64	67	71	76	81	87	94	101	108	115	122	130	138	146	154	162	170	179	187	195	204	212	220	229	237	246	254	263	272	280	289	297	306	315	323	332	341	531	544	557	570	584	597	610	623	637	650	663	676	690	703	716	730	743	756	769	—	—	—
400	71	71	73	75	79	83	88	94	100	106	113	120	127	135	142	150	158	166	174	182	190	198	206	215	223	231	240	248	257	265	274	282	291	299	308	317	325	334	342	533	547	560	573	586	599	612	626	639	652	665	678	692	705	718	731	745	758	771	—	—	—
450	79	80	81	84	87	91	95	101	106	112	119	125	132	139	147	154	162	170	177	185	193	201	210	218	226	234	243	251	259	268	276	285	293	302	310	319	327	336	344	536	549	562	575	589	602	615	628	641	654	667	681	694	707	720	733	747	760	773	—	—	—
500	88	89	90	92	95	99	103	108	113	119	125	131	138	145	152	159	166	174	182	189	197	205	213	221	229	237	246	254	262	270	279	287	296	304	312	321	329	338	346	539	552	565	578	591	605	618	631	644	657	670	683	696	709	723	736	749	762	775	—	—	—
550	97	97	99	101	103	107	110	115	120	125	131	137	144	150	157	164	171	179	186	194	201	209	217	225	233	241	249	257	265	273	282	290	298	307	315	323	332	340	530	543	556	569	582	595	608	621	634	647	660	673	686	699	712	725	738	751	765	—	—	—	—
600	106	106	107	109	112	115	118	122	127	132	138	144	150	156	163	169	176	183	191	198	206	213	221	229	237	244	252	260	269	277	285	293	301	310	318	326	335	343	534	547	559	572	585	598	611	624	637	650	663	676	689	702	715	728	741	754	767	—	—	—	—
650	115	115	116	118	120	123	126	130	135	139	145	150	156	162	168	175	182	189	196	203	210	218	225	233	241	248	256	264	272	280	288	296	305	313	321	329	337	346	538	551	563	576	589	602	615	628	640	653	666	679	692	705	718	731	744	757	770	—	—	—	—
700	123	124	125	126	128	131	134	138	142	147	152	157	163	168	175	181	187	194	201	208	215	223	230	237	245	253	260	268	276	284	292	300	308	316	324	332	341	530	543	555	568	580	593	606	619	631	644	657	670	683	696	709	721	734	747	760	773	—	—	—	—
750	132	133	133	135	137	139	142	146	150	154	159	164	169	175	181	187	193	200	207	213	220	228	235	242	250	257	265	272	280	288	296	304	312	320	328	336	344	535	547	560	572	585	598	610	623	635	648	661	674	687	699	712	725	738	751	764	—	—	—	—	—
800	141	141	142	144	145	148	151	154	158	162	166	171	176	182	187	193	199	206	212	219	226	233	240	247	254	262	269	277	284	292	300	308	315	323	331	339	528	540	552	565	577	590	602	615	627	640	652	665	678	691	703	716	729	742	755	767	—	—	—	—	—
850	150	150	151	152	154	156	159	162	166	170	174	179	183	189	194	200	206	212	218	225	231	238	245	252	259	267	274	281	289	296	304	312	319	327	335	343	533	546	558	570	582	595	607	619	632	644	657	670	682	695	708	720	733	746	758	771	—	—	—	—	—
900	159	159	160	161	163	165	167	170	174	177	182	186	191	196	201	207	212	218	224	231	237	244	251	257	264	272	279	286	293	301	308	316	324	331	339	347	539	551	563	575	588	600	612	625	637	649	662	674	687	699	712	725	737	750	763	775	—	—	—	—	—
950	168	168	168	170	171	173	176	179	182	185	189	194	198	203	208	213	219	225	231	237	243	250	256	263	270	277	284	291	298	306	313	321	328	336	343	534	545	557	569	581	593	605	618	630	642	654	667	679	692	704	717	729	742	754	767	—	—	—	—	—	—
1000	176	177	177	178	180	182	184	187	190	193	197	201	206	210	215	220	226	231	237	243	249	256	262	269	275	282	289	296	303	311	318	325	333	340	528	540	552	563	575	587	599	611	623	635	648	660	672	684	697	709	721	734	746	759	771	—	—	—	—	—	—
1050	185	185	186	187	188	190	193	195	198	201	205	209	213	218	223	228	233	238	244	250	256	262	268	275	281	288	295	302	309	316	323	330	337	345	535	547	558	570	582	593	605	617	629	641	653	665	677	690	702	714	727	739	751	764	776	—	—	—	—	—	—
1100	194	194	195	196	197	199	201	204	206	210	213	217	221	225	230	235	240	245	251	256	262	268	274	281	287	294	300	307	314	321	328	335	342	531	543	554	565	577	588	600	612	623	635	647	659	671	683	695	707	720	732	744	756	769	—	—	—	—	—	—	—
1150	203	203	204	204	206	208	210	212	215	218	221	225	229	233	237	242	247	252	257	263	269	275	281	287	293	299	306	313	319	326	333	340	528	539	550	561	572	584	595	607	618	630	642	653	665	677	689	701	713	725	737	750	762	774	—	—	—	—	—	—	—
1200	212	212	212	213	215	216	218	220	223	226	229	233	237	241	245	250	254	259	264	270	275	281	287	293	299	306	312	318	325	332	339	346	536	547	558	569	580	591	602	614	625	636	648	660	671	683	695	707	719	731	743	755	767	—	—	—	—	—	—	—
1250	220	221	221	222	223	225	227	229	231	234	237	241	244	248	253	257	262	267	272	277	282	288	294	299	306	312	318	324	331	338	344	534	544	555	565	576	587	598	609	621	632	643	655	666	678	690	701	713	725	737	749	761	773	—	—	—	—	—	—	—
1300	229	229	230	231	232	233	235	237	240	243	246	249	252	256	260	265	269	274	279	284	289	295	300	306	312	318	324	330	337	343	532	542	552	563	573	584	595	606	617	628	639	650	662	673	685	696	708	720	731	743	755	767	—	—	—	—	—	—	—	—	—
1350	238	238	239	240	241	242	244	246	248	251	254	257	260	264	268	272	277	281	286	291	296	302	307	313	318	324	330	337	343	531	541	551	561	571	582	592	603	614	625	635	647	658	669	680	692	703	715	726	738	750	761	773	—	—	—	—	—	—	—	—	—
1400	247	247	247	248	249	251	252	254	257	259	262	265	269	272	276	280	284	289	293	298	303	309	314	319	325	331	337	343	531	540	550	560	570	580	590	600	611	622	632	643	654	665	676	687	699	710	721	733	744	756	768	—	—	—	—	—	—	—	—	—
1450	256	256	256	257	258	259	261	263	265	268	270	273	277	280	284	288	292	296	301	306	311	316	321	326	332	338	343	531	540	549	559	569	579	589	599	609	619	630	640	651	662	673	684	695	706	717	729	740	751	763	774	—	—	—	—	—	—	—	—	—
1500	264	265	265	266	267	268	270	272	274	276	279	282	285	288	292	296	300	304	308	313	318	323	328	333	339	344	532	541	550	559	568	578	588	598	607	618	628	638	649	659	670	681	691	702	713	725	736	747	758	770	—	—	—	—	—	—	—	—	—	—
1550	273	273	274	275	276	277	278	280	282	285	287	290	293	296	300	304	308	312	316	321	325	330	335	340	346	534	542	551	560	569	578	587	597	607	616	626	636	647	657	667	678	689	699	710	721	732	743	754	766	—	—	—	—	—	—	—	—	—	—
1600	282	282	283	283	284	286	287	289	291	293	296	298	301	305	308	312	315	319	324	328	333	337	342	528	536	544	552	561	570	579	588	597	606	616	626	635	645	655	666	676	686	697	707	718	729	740	751	762	773	—	—	—	—	—	—	—	—	—	—
1650	291	291	291	292	293	294	296	297	299	302	304	307	310	313	316	320	323	327	331	336	340	345	531	539	547	555	563	571	580	589	598	607	616	625	635	644	654	664	674	684	695	705	716	726	737	748	758	769	—	—	—	—	—	—	—	—	—	—	—
1700	300	300	300	301	302	303	304	306	308	310	312	315	318	321	324	328	331	335	339	343	528	535	543	550	558	565	573	582	590	599	607	616	626	635	644	654	663	673	683	693	703	714	724	734	745	756	766	—	—	—	—	—	—	—	—	—	—	—
1750	309	309	309	310	311	312	313	315	317	319	321	323	326	329	332	336	339	343	347	534	540	547	554	561	569	576	584	592	600	609	618	626	635	644	654	663	673	682	692	702	712	722	732	743	753	764	774	—	—	—	—	—	—	—	—	—	—	—
1800	317	318	318	318	319	320	322	323	325	327	329	332	335	337	341	344	528	533	539	545	552	558	565	572	580	587	595	603	611	619	628	636	645	654	663	673	682	692	701	711	721	731	741	751	762	772	—	—	—	—	—	—	—	—	—	—	—
1850	326	326	327	327	328	329	330	332	334	336	338	340	343	346	530	535	540	546	551	557	563	570	577	584	591	598	606	614	622	630	638	647	655	664	673	682	692	701	711	720	730	740	750	760	770	—	—	—	—	—	—	—	—	—	—	—	—
1900	335	335	335	336	337	338	339	341	342	344	346	530	534	538	543	547	552	558	563	569	575	582	588	595	602	609	617	625	632	640	649	657	666	674	683	692	701	711	720	730	739	749	759	769	—	—	—	—	—	—	—	—	—	—	—	—	—
1950	344	344	344	345	346	347	529	531	533	536	539	543	547	551	555	560	565	570	575	581	587	593	600	607	614	621	628	635	643	651	659	667	676	684	693	702	711	720	730	739	748	758	768	—	—	—	—	—	—	—	—	—	—	—	—	—	—
2000	536	536	537	537	539	540	542	544	547	549	552	556	559	563	568	572	577	582	588	593	599	605	612	618	625	632	639	647	654	662	670	678	686	695	703	712	721	730	739	748	758	767	—	—	—	—	—	—	—	—	—	—	—	—	—	—	—
2050	549	549	550	551	552	553	555	557	560	562	565	569	572	576	580	585	590	595	600	605	611	617	623	630	636	643	650	658	665	673	681	689	697	705	714	722	731	740	749	758	767	—	—	—	—	—	—	—	—	—	—	—	—	—	—	—
2100	563	563	563	564	565	567	568	570	573	575	578	582	585	589	593	598	602	607	612	618	623	629	635	642	648	655	662	669	676	684	691	699	707	716	724	732	741	750	759	768	—	—	—	—	—	—	—	—	—	—	—	—	—	—	—	—
2150	576	576	577	577	579	580	582	584	586	589	591	595	598	602	606	610	615	619	625	630	635	641	647	653	660	666	673	680	687	695	702	710	718	726	734	743	751	760	769	—	—	—	—	—	—	—	—	—	—	—	—	—	—	—	—	—
2200	589	590	590	591	592	593	595	597	599	602	605	608	611	615	619	623	627	632	637	642	648	653	659	665	671	678	685	692	699	706	713	721	729	737	745	753	762	770	—	—	—	—	—	—	—	—	—	—	—	—	—	—	—	—	—	—
2250	603	603	603	604	605	607	608	610	612	615	618	621	624	628	631	635	640	644	649	654	660	665	671	677	683	690	696	703	710	717	725	732	740	748	756	764	772	—	—	—	—	—	—	—	—	—	—	—	—	—	—	—	—	—	—	—
2300	616	616	617	618	619	620	622	623	626	628	631	634	637	640	644	648	652	657	662	667	672	677	683	689	695	701	708	715	721	729	736	743	751	758	766	774	—	—	—	—	—	—	—	—	—	—	—	—	—	—	—	—	—	—	—	—
2350	630	630	630	631	632	633	635	637	639	641	644	647	650	653	657	661	665	670	674	679	684	690	695	701	707	713	720	726	733	740	747	754	762	769	—	—	—	—	—	—	—	—	—	—	—	—	—	—	—	—	—	—	—	—	—	—
2400	643	643	644	644	645	647	648	650	652	654	657	660	663	666	670	674	678	682	687	692	697	702	707	713	719	725	731	738	744	751	758	766	773	—	—	—	—	—	—	—	—	—	—	—	—	—	—	—	—	—	—	—	—	—	—	—
2450	656	657	657	658	659	660	661	663	665	667	670	673	676	679	683	687	691	695	699	704	709	714	720	725	731	737	743	750	756	763	770	—	—	—	—	—	—	—	—	—	—	—	—	—	—	—	—	—	—	—	—	—	—	—	—	—
2500	670	670	670	671	672	673	675	676	678	681	683	686	689	692	696	699	703	708	712	717	721	727	732	737	743	749	755	761	768	774	—	—	—	—	—	—	—	—	—	—	—	—	—	—	—	—	—	—	—	—	—	—	—	—	—	—
2550	683	683	684	684	685	687	688	690	692	694	696	699	702	705	709	712	716	720	725	729	734	739	744	750	755	761	767	773	—	—	—	—	—	—	—	—	—	—	—	—	—	—	—	—	—	—	—	—	—	—	—	—	—	—	—	—
2600	697	697	697	698	699	700	701	703	705	707	709	712	715	718	721	725	729	733	737	742	746	751	756	762	767	773	—	—	—	—	—	—	—	—	—	—	—	—	—	—	—	—	—	—	—	—	—	—	—	—	—	—	—	—	—	—
2650	710	710	711	711	712	713	715	716	718	720	723	725	728	731	734	738	742	746	750	754	759	764	769	774	—	—	—	—	—	—	—	—	—	—	—	—	—	—	—	—	—	—	—	—	—	—	—	—	—	—	—	—	—	—	—	—
2700	723	724	724	725	725	727	728	730	731	733	736	738	741	744	747	751	755	758	763	767	771	776	—	—	—	—	—	—	—	—	—	—	—	—	—	—	—	—	—	—	—	—	—	—	—	—	—	—	—	—	—	—	—	—	—	—
2750	737	737	737	738	739	740	741	743	745	747	749	751	754	757	760	764	767	771	775	—	—	—	—	—	—	—	—	—	—	—	—	—	—	—	—	—	—	—	—	—	—	—	—	—	—	—	—	—	—	—	—	—	—	—	—	—
2800	750	750	751	751	752	753	755	756	758	760	762	765	767	770	773	—	—	—	—	—	—	—	—	—	—	—	—	—	—	—	—	—	—	—	—	—	—	—	—	—	—	—	—	—	—	—	—	—	—	—	—	—	—	—	—	—
2850	764	764	764	765	766	767	768	769	771	773	775	—	—	—	—	—	—	—	—	—	—	—	—	—	—	—	—	—	—	—	—	—	—	—	—	—	—	—	—	—	—	—	—	—	—	—	—	—	—	—	—	—	—	—	—	—
2900	—	—	—	—	—	—	—	—	—	—	—	—	—	—	—	—	—	—	—	—	—	—	—	—	—	—	—	—	—	—	—	—	—	—	—	—	—	—	—	—	—	—	—	—	—	—	—	—	—	—	—	—	—	—	—	—
2950	—	—	—	—	—	—	—	—	—	—	—	—	—	—	—	—	—	—	—	—	—	—	—	—	—	—	—	—	—	—	—	—	—	—	—	—	—	—	—	—	—	—	—	—	—	—	—	—	—	—	—	—	—	—	—	—
3000	—	—	—	—	—	—	—	—	—	—	—	—	—	—	—	—	—	—	—	—	—	—	—	—	—	—	—	—	—	—	—	—	—	—	—	—	—	—	—	—	—	—	—	—	—	—	—	—	—	—	—	—	—	—	—	—

Hazardous objects — Zmin [mm]

Minimum zone length (max range 3.0 m)

By\Bx	0	50	100	150	200	250	300	350	400	450	500	550	600	650	700	750	800	850	900	950	1000	1050	1100	1150	1200	1250	1300	1350	1400	1450	1500	1550	1600	1650	1700	1750	1800	1850	1900	1950	2000	2050	2100	2150	2200	2250	2300	2350	2400	2450	2500	2550	2600	2650	2700	2750	2800	2850	2900	2950	3000
0	0	9	18	26	35	44	53	62	71	79	88	97	106	115	123	132	141	150	159	168	176	185	194	203	212	220	229	238	247	256	866	895	924	953	981	1010	1039	1068	1097	1126	1155	1184	1212	1241	1270	1299	1328	1357	1386	1415	1443	1472	—	—	—	—	—	—	—	—	—
50	9	12	20	28	36	45	54	62	71	80	89	97	106	115	124	133	141	150	159	168	177	185	194	203	212	221	229	238	247	256	867	895	924	953	982	1011	1040	1068	1097	1126	1155	1184	1213	1242	1270	1299	1328	1357	1386	1415	1444	1473	—	—	—	—	—	—	—	—	—
100	18	20	25	32	39	47	56	64	73	81	90	99	107	116	125	133	142	151	160	168	177	186	195	204	212	221	230	239	247	256	868	897	926	954	983	1012	1041	1070	1098	1127	1156	1185	1214	1243	1271	1300	1329	1358	1387	1416	1445	1473	—	—	—	—	—	—	—	—	—
150	26	28	32	37	44	51	59	67	75	84	92	101	109	118	126	135	144	152	161	170	178	187	196	204	213	222	231	240	248	257	870	899	928	957	985	1014	1043	1072	1100	1129	1158	1187	1216	1244	1273	1302	1331	1360	1388	1417	1446	1475	—	—	—	—	—	—	—	—	—
200	35	36	39	44	50	56	64	71	79	87	95	103	112	120	128	137	145	154	163	171	180	188	197	206	215	223	232	241	249	258	874	902	931	960	988	1017	1046	1074	1103	1132	1160	1189	1218	1247	1275	1304	1333	1362	1390	1419	1448	1477	—	—	—	—	—	—	—	—	—
250	44	45	47	51	56	62	69	76	83	91	99	107	115	123	131	139	148	156	165	173	182	190	199	208	216	225	233	242	251	259	878	906	935	964	992	1021	1049	1078	1106	1135	1164	1192	1221	1250	1278	1307	1336	1364	1393	1422	1451	1479	—	—	—	—	—	—	—	—	—
300	53	54	56	59	64	69	75	81	88	95	103	110	118	126	134	142	151	159	167	176	184	193	201	210	218	227	235	244	252	855	883	912	940	968	997	1025	1054	1082	1111	1139	1168	1196	1225	1253	1282	1311	1339	1368	1396	1425	1454	1482	—	—	—	—	—	—	—	—	—
350	62	62	64	67	71	76	81	87	94	101	108	115	122	130	138	146	154	162	170	179	187	195	204	212	220	229	237	246	254	861	889	917	946	974	1002	1030	1059	1087	1115	1144	1172	1201	1229	1258	1286	1315	1343	1372	1400	1429	1457	1486	—	—	—	—	—	—	—	—	—
400	71	71	73	75	79	83	88	94	100	106	113	120	127	135	142	150	158	166	174	182	190	198	206	215	223	231	240	248	257	868	896	924	952	980	1008	1036	1065	1093	1121	1149	1178	1206	1234	1263	1291	1319	1348	1376	1405	1433	1462	1490	—	—	—	—	—	—	—	—	—
450	79	80	81	84	87	91	95	101	106	112	119	125	132	139	147	154	162	170	177	185	193	201	210	218	226	234	243	251	259	877	904	932	960	987	1015	1043	1071	1099	1127	1155	1184	1212	1240	1268	1296	1325	1353	1381	1410	1438	1467	1495	—	—	—	—	—	—	—	—	—
500	88	89	90	92	95	99	103	108	113	119	125	131	138	145	152	159	166	174	182	189	197	205	213	221	229	237	246	254	858	886	913	940	968	995	1023	1051	1079	1106	1134	1162	1190	1218	1246	1274	1303	1331	1359	1387	1415	1444	1472	—	—	—	—	—	—	—	—	—
550	97	97	99	101	103	107	110	115	120	125	131	137	144	150	157	164	171	179	186	194	201	209	217	225	233	241	249	257	868	895	922	950	977	1004	1032	1059	1087	1114	1142	1170	1198	1225	1253	1281	1309	1337	1365	1393	1422	1450	1478	—	—	—	—	—	—	—	—	—
600	106	106	107	109	112	115	118	122	127	132	138	144	150	156	163	169	176	183	191	198	206	213	221	229	237	244	252	853	879	906	933	960	987	1014	1041	1068	1095	1123	1150	1178	1206	1233	1261	1289	1317	1344	1372	1400	1428	1456	1484	—	—	—	—	—	—	—	—	—
650	115	115	116	118	120	123	126	130	135	139	145	150	156	162	168	175	182	189	196	203	210	218	225	233	241	248	256	865	891	917	944	970	997	1024	1051	1078	1105	1132	1159	1187	1214	1242	1269	1297	1324	1352	1380	1408	1436	1463	1491	—	—	—	—	—	—	—	—	—
700	123	124	125	126	128	131	134	138	142	147	152	157	163	168	175	181	187	194	201	208	215	223	230	237	245	253	260	878	904	930	956	982	1008	1035	1061	1088	1115	1142	1169	1196	1223	1251	1278	1305	1333	1360	1388	1416	1443	1471	1499	—	—	—	—	—	—	—	—	—
750	132	133	133	135	137	139	142	146	150	154	159	164	169	175	181	187	193	200	207	213	220	228	235	242	250	257	867	892	917	943	968	994	1020	1046	1073	1099	1126	1153	1179	1206	1233	1260	1287	1315	1342	1369	1397	1424	1452	1479	—	—	—	—	—	—	—	—	—	—
800	141	141	142	144	145	148	151	154	158	162	166	171	176	182	187	193	199	206	212	219	226	233	240	247	254	857	881	906	931	956	981	1007	1033	1059	1085	1111	1137	1164	1190	1217	1244	1270	1297	1324	1352	1379	1406	1433	1461	1488	—	—	—	—	—	—	—	—	—	—
850	150	150	151	152	154	156	159	162	166	170	174	179	183	189	194	200	206	212	218	225	231	238	245	252	259	873	897	921	946	970	995	1021	1046	1072	1097	1123	1149	1175	1202	1228	1255	1281	1308	1335	1362	1389	1416	1443	1470	1497	—	—	—	—	—	—	—	—	—	—
900	159	159	160	161	163	165	167	170	174	177	182	186	191	196	201	207	212	218	224	231	237	244	251	257	866	889	913	937	961	985	1010	1035	1060	1085	1111	1136	1162	1188	1214	1240	1266	1293	1319	1346	1372	1399	1426	1453	1480	—	—	—	—	—	—	—	—	—	—	—
950	168	168	168	170	171	173	176	179	182	185	189	194	198	203	208	213	219	225	231	237	243	250	256	861	884	906	930	953	977	1001	1025	1050	1074	1099	1124	1150	1175	1201	1226	1252	1278	1304	1331	1357	1384	1410	1437	1463	1490	—	—	—	—	—	—	—	—	—	—	—
1000	176	177	177	178	180	182	184	187	190	193	197	201	206	210	215	220	226	231	237	243	249	256	858	880	902	924	947	970	993	1017	1041	1065	1089	1114	1139	1164	1189	1214	1240	1265	1291	1317	1343	1369	1395	1422	1448	1475	—	—	—	—	—	—	—	—	—	—	—
1050	185	185	186	187	188	190	193	195	198	201	205	209	213	218	223	228	233	238	244	250	256	857	878	899	921	943	965	987	1010	1034	1057	1081	1105	1129	1154	1178	1203	1228	1253	1279	1304	1330	1356	1381	1407	1434	1460	1486	—	—	—	—	—	—	—	—	—	—	—
1100	194	194	195	196	197	199	201	204	206	210	213	217	221	225	230	235	240	245	251	256	858	878	898	919	940	961	983	1005	1028	1051	1074	1097	1121	1145	1169	1193	1218	1243	1268	1293	1318	1343	1369	1394	1420	1446	1472	1498	—	—	—	—	—	—	—	—	—	—	—
1150	203	203	204	204	206	208	210	212	215	218	221	225	229	233	237	242	247	252	257	861	880	899	919	939	960	981	1002	1024	1046	1068	1091	1114	1138	1161	1185	1209	1233	1258	1282	1307	1332	1357	1382	1408	1433	1459	1485	—	—	—	—	—	—	—	—	—	—	—
1200	212	212	212	213	215	216	218	220	223	226	229	233	237	241	245	250	254	259	866	884	902	921	940	960	980	1000	1021	1043	1065	1087	1109	1132	1155	1178	1201	1225	1249	1273	1297	1322	1347	1371	1396	1422	1447	1472	1498	—	—	—	—	—	—	—	—	—	—	—
1250	220	221	221	222	223	225	227	229	231	234	237	241	244	248	253	257	857	873	889	906	924	943	961	981	1000	1021	1041	1062	1084	1105	1127	1150	1172	1195	1218	1242	1265	1289	1313	1337	1362	1386	1411	1436	1461	1486	—	—	—	—	—	—	—	—	—	—	—
1300	229	229	230	231	232	233	235	237	240	243	246	249	252	256	260	867	881	897	913	930	947	965	983	1002	1021	1041	1061	1082	1103	1124	1146	1168	1190	1213	1236	1259	1282	1305	1329	1353	1377	1401	1426	1451	1475	—	—	—	—	—	—	—	—	—	—	—	—
1350	238	238	239	240	241	242	244	246	248	251	254	257	853	865	878	892	906	921	937	953	970	987	1005	1024	1043	1062	1082	1102	1123	1144	1165	1187	1209	1231	1253	1276	1299	1322	1346	1369	1393	1417	1441	1466	1490	—	—	—	—	—	—	—	—	—	—	—	—
1400	247	247	247	248	249	251	252	254	257	259	858	868	879	891	904	917	931	946	961	977	993	1010	1028	1046	1065	1084	1103	1123	1143	1164	1185	1206	1227	1249	1271	1294	1317	1339	1363	1386	1409	1433	1457	1481	—	—	—	—	—	—	—	—	—	—	—	—
1450	256	256	256	257	258	259	855	861	868	877	886	895	906	917	930	943	956	970	985	1001	1017	1034	1051	1068	1087	1105	1124	1144	1164	1184	1205	1225	1247	1268	1290	1312	1334	1357	1380	1403	1426	1450	1473	1497	—	—	—	—	—	—	—	—	—	—	—	—
1500	866	867	868	870	874	878	883	889	896	904	913	922	933	944	956	968	981	995	1010	1025	1041	1057	1074	1091	1109	1127	1146	1165	1185	1205	1225	1245	1266	1287	1309	1331	1353	1375	1398	1420	1443	1467	1490	—	—	—	—	—	—	—	—	—	—	—	—	—
1550	895	895	897	899	902	906	912	917	924	932	940	950	960	970	982	994	1007	1021	1035	1050	1065	1081	1097	1114	1132	1150	1168	1187	1206	1225	1245	1266	1286	1307	1328	1350	1371	1393	1416	1438	1461	1484	—	—	—	—	—	—	—	—	—	—	—	—	—
1600	924	924	926	928	931	935	940	946	952	960	968	977	987	997	1008	1020	1033	1046	1060	1074	1089	1105	1121	1138	1155	1172	1190	1209	1227	1247	1266	1286	1306	1327	1348	1369	1390	1412	1434	1456	1479	—	—	—	—	—	—	—	—	—	—	—	—	—	—
1650	953	953	954	957	960	964	968	974	980	987	995	1004	1014	1024	1035	1046	1059	1072	1085	1099	1114	1129	1145	1161	1178	1195	1213	1231	1249	1268	1287	1307	1327	1347	1368	1389	1410	1431	1453	1475	1497	—	—	—	—	—	—	—	—	—	—	—	—	—	—
1700	981	982	983	985	988	992	997	1002	1008	1015	1023	1032	1041	1051	1061	1073	1085	1097	1111	1124	1139	1154	1169	1185	1201	1218	1236	1253	1271	1290	1309	1328	1348	1368	1388	1409	1429	1451	1472	1494	—	—	—	—	—	—	—	—	—	—	—	—	—	—	—
1750	1010	1011	1012	1014	1017	1021	1025	1030	1036	1043	1051	1059	1068	1078	1088	1099	1111	1123	1136	1150	1164	1178	1193	1209	1225	1242	1259	1276	1294	1312	1331	1350	1369	1389	1409	1429	1449	1470	1491	—	—	—	—	—	—	—	—	—	—	—	—	—	—	—	—
1800	1039	1040	1041	1043	1046	1049	1054	1059	1065	1071	1079	1087	1095	1105	1115	1126	1137	1149	1162	1175	1189	1203	1218	1233	1249	1265	1282	1299	1317	1334	1353	1371	1390	1410	1429	1449	1470	1490	—	—	—	—	—	—	—	—	—	—	—	—	—	—	—	—	—
1850	1068	1068	1070	1072	1074	1078	1082	1087	1093	1099	1106	1114	1123	1132	1142	1153	1164	1175	1188	1201	1214	1228	1243	1258	1273	1289	1305	1322	1339	1357	1375	1393	1412	1431	1451	1470	1490	—	—	—	—	—	—	—	—	—	—	—	—	—	—	—	—	—	—
1900	1097	1097	1098	1100	1103	1106	1111	1115	1121	1127	1134	1142	1150	1159	1169	1179	1190	1202	1214	1226	1240	1253	1268	1282	1297	1313	1329	1346	1363	1380	1398	1416	1434	1453	1472	1491	—	—	—	—	—	—	—	—	—	—	—	—	—	—	—	—	—	—	—
1950	1126	1126	1127	1129	1132	1135	1139	1144	1149	1155	1162	1170	1178	1187	1196	1206	1217	1228	1240	1252	1265	1279	1293	1307	1322	1337	1353	1369	1386	1403	1420	1438	1456	1475	1494	—	—	—	—	—	—	—	—	—	—	—	—	—	—	—	—	—	—	—	—
2000	1155	1155	1156	1158	1160	1164	1168	1172	1178	1184	1190	1198	1206	1214	1223	1233	1244	1255	1266	1278	1291	1304	1318	1332	1347	1362	1377	1393	1409	1426	1443	1461	1479	1497	—	—	—	—	—	—	—	—	—	—	—	—	—	—	—	—	—	—	—	—
2050	1184	1184	1185	1187	1189	1192	1196	1201	1206	1212	1218	1225	1233	1242	1251	1260	1270	1281	1293	1304	1317	1330	1343	1357	1371	1386	1401	1417	1433	1450	1467	1484	—	—	—	—	—	—	—	—	—	—	—	—	—	—	—	—	—	—	—	—	—	—
2100	1212	1213	1214	1216	1218	1221	1225	1229	1234	1240	1246	1253	1261	1269	1278	1287	1297	1308	1319	1331	1343	1356	1369	1382	1396	1411	1426	1441	1457	1473	1490	—	—	—	—	—	—	—	—	—	—	—	—	—	—	—	—	—	—	—	—	—	—	—	—
2150	1241	1242	1243	1244	1247	1250	1253	1258	1263	1268	1274	1281	1289	1297	1305	1315	1324	1335	1346	1357	1369	1381	1394	1408	1422	1436	1451	1466	1481	1497	—	—	—	—	—	—	—	—	—	—	—	—	—	—	—	—	—	—	—	—	—	—	—	—	—
2200	1270	1270	1271	1273	1275	1278	1282	1286	1291	1296	1303	1309	1317	1324	1333	1342	1352	1362	1372	1384	1395	1407	1420	1433	1447	1461	1475	1490	—	—	—	—	—	—	—	—	—	—	—	—	—	—	—	—	—	—	—	—	—	—	—	—	—	—	—	—
2250	1299	1299	1300	1302	1304	1307	1311	1315	1319	1325	1331	1337	1344	1352	1360	1369	1379	1389	1399	1410	1422	1434	1446	1459	1472	1486	—	—	—	—	—	—	—	—	—	—	—	—	—	—	—	—	—	—	—	—	—	—	—	—	—	—	—	—	—	—
2300	1328	1328	1329	1331	1333	1336	1339	1343	1348	1353	1359	1365	1372	1380	1388	1397	1406	1416	1426	1437	1448	1460	1472	1485	1498	—	—	—	—	—	—	—	—	—	—	—	—	—	—	—	—	—	—	—	—	—	—	—	—	—	—	—	—	—	—
2350	1357	1357	1358	1360	1362	1364	1368	1372	1376	1381	1387	1393	1400	1408	1416	1424	1433	1443	1453	1463	1475	1486	1498	—	—	—	—	—	—	—	—	—	—	—	—	—	—	—	—	—	—	—	—	—	—	—	—	—	—	—	—	—	—	—	—
2400	1386	1386	1387	1388	1390	1393	1396	1400	1405	1410	1415	1422	1428	1436	1443	1452	1461	1470	1480	1490	—	—	—	—	—	—	—	—	—	—	—	—	—	—	—	—	—	—	—	—	—	—	—	—	—	—	—	—	—	—	—	—	—	—	—	—
2450	1415	1415	1416	1417	1419	1422	1425	1429	1433	1438	1444	1450	1456	1463	1471	1479	1488	1497	—	—	—	—	—	—	—	—	—	—	—	—	—	—	—	—	—	—	—	—	—	—	—	—	—	—	—	—	—	—	—	—	—	—	—	—	—	—
2500	1443	1444	1445	1446	1448	1451	1454	1457	1462	1467	1472	1478	1484	1491	1499	—	—	—	—	—	—	—	—	—	—	—	—	—	—	—	—	—	—	—	—	—	—	—	—	—	—	—	—	—	—	—	—	—	—	—	—	—	—	—	—
2550	1472	1473	1473	1475	1477	1479	1482	1486	1490	1495	—	—	—	—	—	—	—	—	—	—	—	—	—	—	—	—	—	—	—	—	—	—	—	—	—	—	—	—	—	—	—	—	—	—	—	—	—	—	—	—	—	—	—	—
2600	—	—	—	—	—	—	—	—	—	—	—	—	—	—	—	—	—	—	—	—	—	—	—	—	—	—	—	—	—	—	—	—	—	—	—	—	—	—	—	—	—	—	—	—	—	—	—	—	—	—	—	—	—	—
2650	—	—	—	—	—	—	—	—	—	—	—	—	—	—	—	—	—	—	—	—	—	—	—	—	—	—	—	—	—	—	—	—	—	—	—	—	—	—	—	—	—	—	—	—	—	—	—	—	—	—	—	—	—	—
2700	—	—	—	—	—	—	—	—	—	—	—	—	—	—	—	—	—	—	—	—	—	—	—	—	—	—	—	—	—	—	—	—	—	—	—	—	—	—	—	—	—	—	—	—	—	—	—	—	—	—	—	—	—	—
2750	—	—	—	—	—	—	—	—	—	—	—	—	—	—	—	—	—	—	—	—	—	—	—	—	—	—	—	—	—	—	—	—	—	—	—	—	—	—	—	—	—	—	—	—	—	—	—	—	—	—	—	—	—	—
2800	—	—	—	—	—	—	—	—	—	—	—	—	—	—	—	—	—	—	—	—	—	—	—	—	—	—	—	—	—	—	—	—	—	—	—	—	—	—	—	—	—	—	—	—	—	—	—	—	—	—	—	—	—	—
2850	—	—	—	—	—	—	—	—	—	—	—	—	—	—	—	—	—	—	—	—	—	—	—	—	—	—	—	—	—	—	—	—	—	—	—	—	—	—	—	—	—	—	—	—	—	—	—	—	—	—	—	—	—	—
2900	—	—	—	—	—	—	—	—	—	—	—	—	—	—	—	—	—	—	—	—	—	—	—	—	—	—	—	—	—	—	—	—	—	—	—	—	—	—	—	—	—	—	—	—	—	—	—	—	—	—	—	—	—	—
2950	—	—	—	—	—	—	—	—	—	—	—	—	—	—	—	—	—	—	—	—	—	—	—	—	—	—	—	—	—	—	—	—	—	—	—	—	—	—	—	—	—	—	—	—	—	—	—	—	—	—	—	—	—	—
3000	—	—	—	—	—	—	—	—	—	—	—	—	—	—	—	—	—	—	—	—	—	—	—	—	—	—	—	—	—	—	—	—	—	—	—	—	—	—	—	—	—	—	—	—	—	—	—	—	—	—	—	—	—	—

If the desired zone geometry includes values that fall between the discretization of the tables, use linear interpolation between the neighboring values.

The values in the tables are calculated based on the geometric restrictions implied by the specifications in Technical specifications (Table 4). The values have been calculated using the following formulae. When designing the protection zone, it is sufficient to refer to the tables above, without using the formulae, but they are given here for reference.

The z-values in the tables have been calculated as

$$z_{\min} = \frac{\sqrt{B_x^2 + B_y^2}}{\tan\theta_D},$$

where $(B_x,\ B_y)$ are the vertices of the outmost corners of the bounding box and θ_D is the opening angle of the detection volume, given in Technical specifications (Table 4) for each detection scenario – the zone type and the body part or object to be detected

When calculating the minimum length, the "range at opening angle"-value for the chosen target type and θ_D have been carefully considered. First, the largest opening angle from Technical specifications (Table 4) is chosen. This gives the smallest $z_{\min}$. This value must be so that

$$B_x^2 + z_{\min}^2 \leq \text{maximum range at angle for given } \theta_D,$$
$$B_y^2 + z_{\min}^2 \leq \text{maximum range at angle for given } \theta_D.$$

If either of these requirements are not satisfied, $z_{\min}$ is recalculated with the smaller opening angle for the chosen detection category. These considerations have been applied to the values in the table above.